BLUMOTION
by Blum

TIP-ON BLUMOTION
by Blum

TIP-ON
by Blum

Tablar-Arretierung | pull-out shelf lock | blocage de tablette coulissante | arresto del ripiano estraibile | sistema de bloqueo del entrepaño | blokada szuflady tackowej | Фиксатор выдвижной полки | 搁板锁定装置

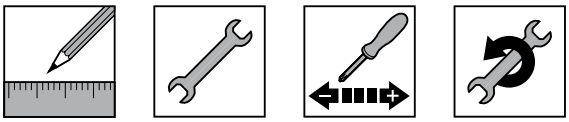

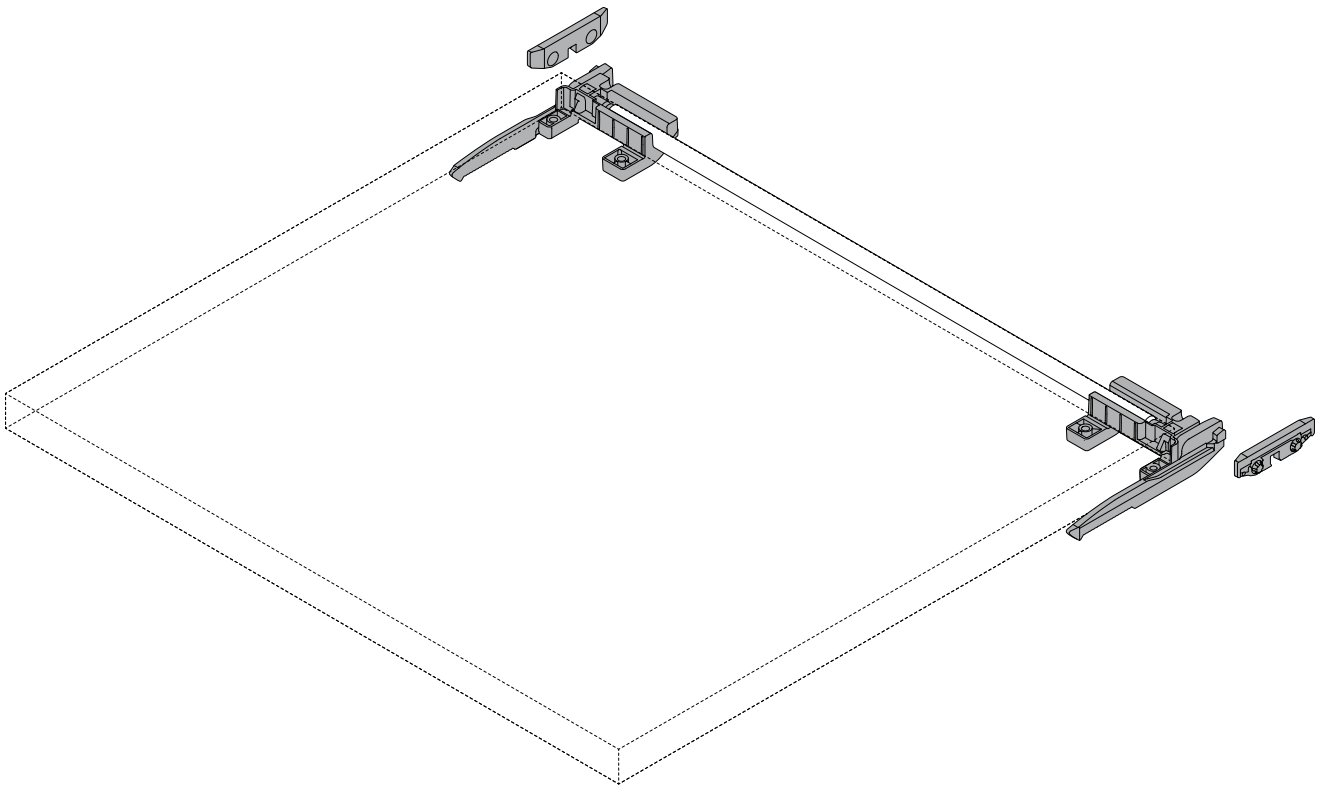

www.blum.com

Standardanwendungen | Standard applications | Applications standard | Applicazioni standard | Aplicaciones estándar | Rozwiązania standardowe | Стандартные конструкции | 标准应用





www.blum.com/shelflock



Planung | Planning | Planification | Progettazione | Planificación | Planowanie | Проектирование | 设计



Montage | Assembly | Montage | Montaggio | Montaje | Montaż | Монтаж | 安装



Einstellung | Adjustment | Réglage | Regolazione | Ajuste | Regulacja | Регулировка | 调节



Demontage | Removal | Démontage | Smontaggio | Desmontaje | Demontaż | Демонтаж | 拆卸



Klickbar | Clickable | Cliquable | Cliccabile | Se puede hacer clic | Klikalny | Кликабельно | 可点击

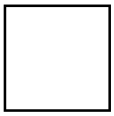

Nicht Klickbar | Not clickable | Pas cliquable | Non cliccabile | No se puede hacer clic | Nie klikalny | Некликабельно | 不可点击



Zurück | Back | Retour | Indietro | Hacia atrás | Wstecz | Назад | 返回

MD-067/3 · 03.22 · © Copyright by Blum

760H
766H

560H
561H

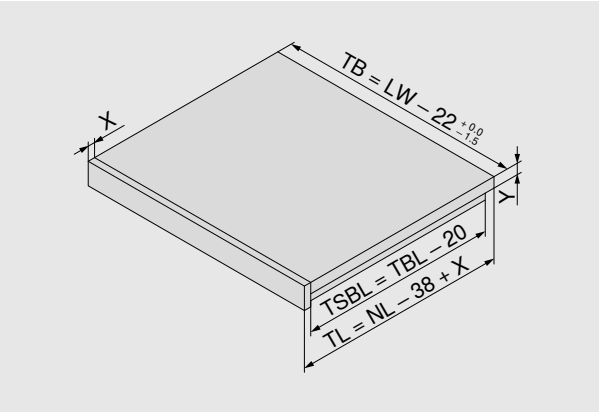

760H... MOVENTO liugur
560H... TANDEM liugur

TB = kapi siselaius miinus 22mm
Näit: 568mm miinus 22mm = 546mm
= riiuli laius

TL = liuguri pikkus (NL) = riiuli sügavus
TL = NL miinus 38mm + esipaneeli # X mm
Näit: 500 miinus 38mm = 462mm
= riiuli plaadi sügavus (+ esipaneel)

560H
560F

760H
766H

Liistud: Mõõt: riiuli plaadi sügavus miinus 20mm
Laius 10mm, kõrgus 12-15mm

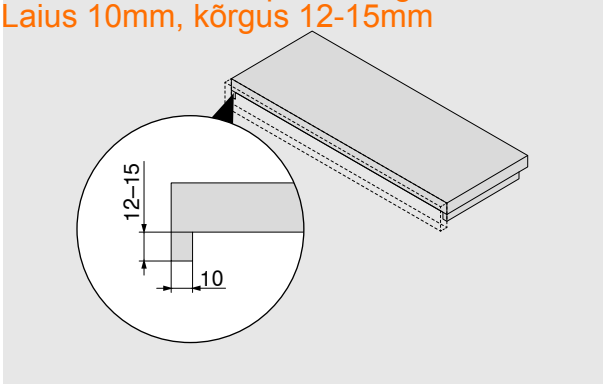

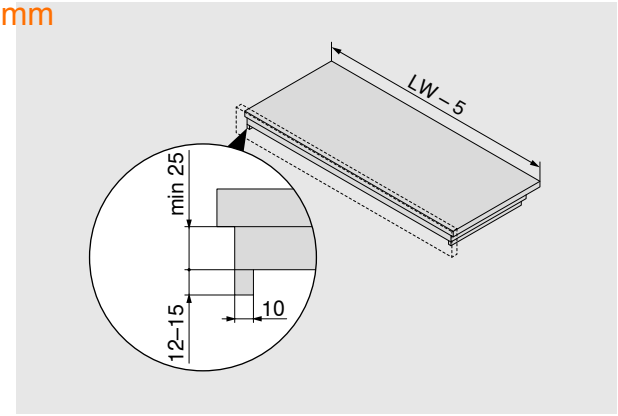

560F
561F

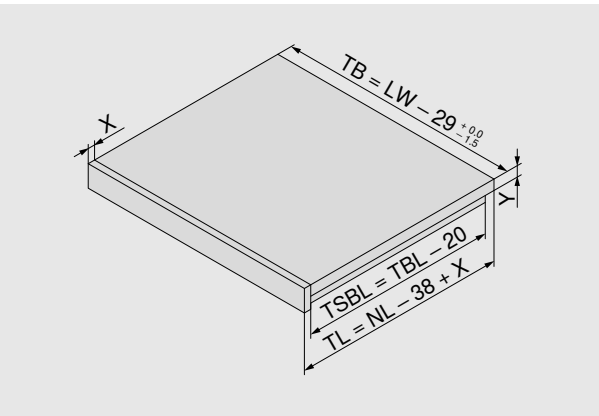

561H
561F

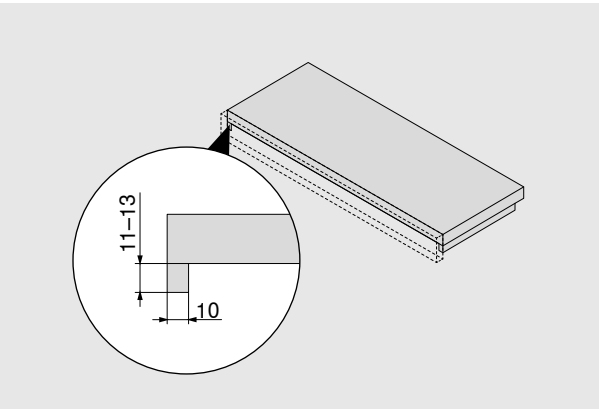

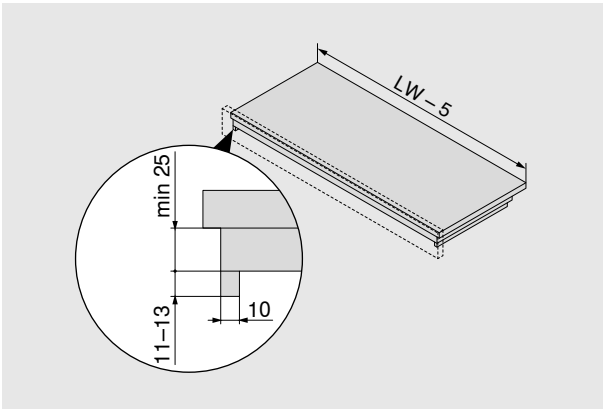

MD-067/3 · 03.22 · © Copyright by Blum

760H
766H

560H
561H

560F
561F

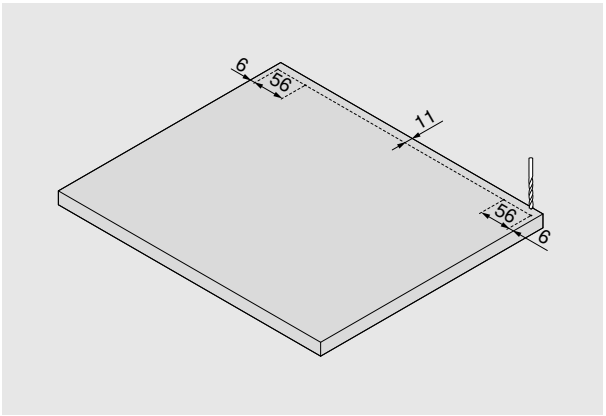

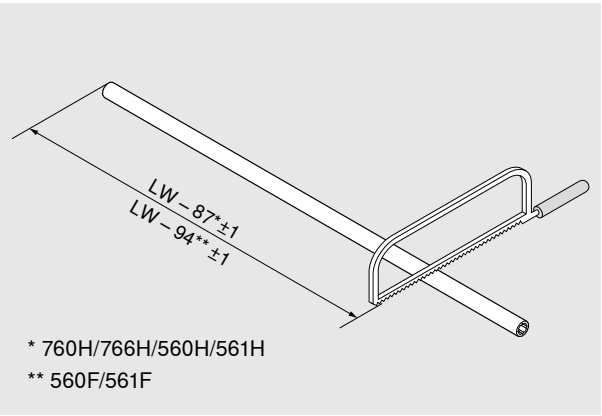

* 760H/766H/560H/561H
** 560F/561F

MD-067/3 · 03.22 · © Copyright by Blum

1

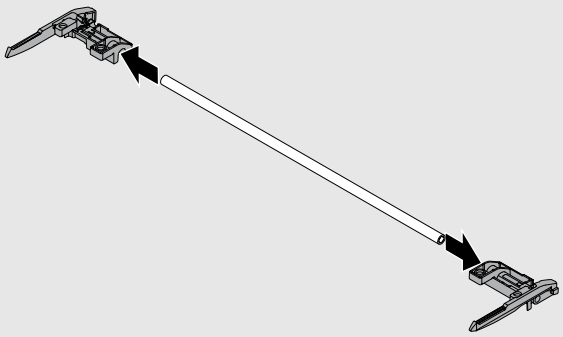

2

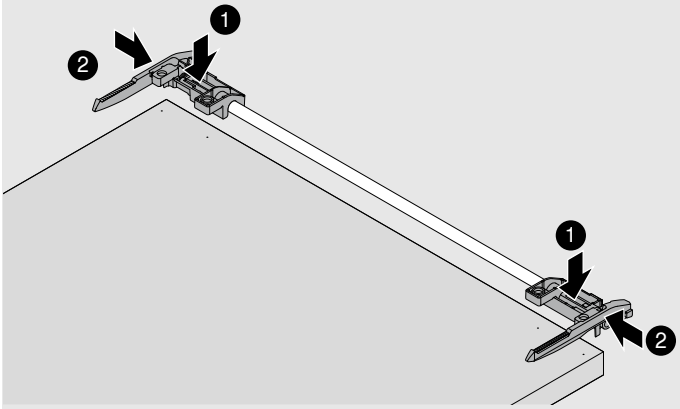

3

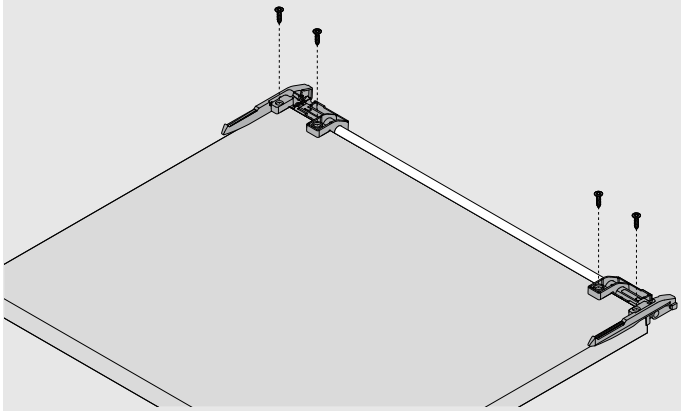

4

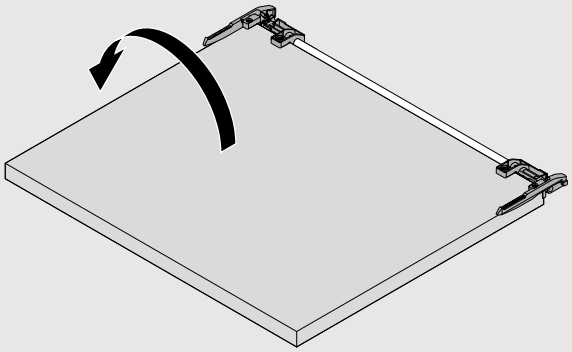

5

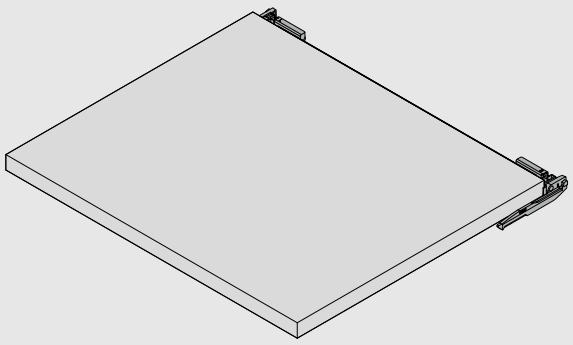

6

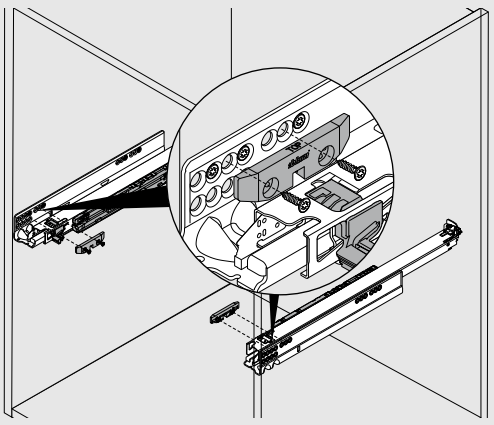

MD-067/3 · 03.22 · © Copyright by Blum

7

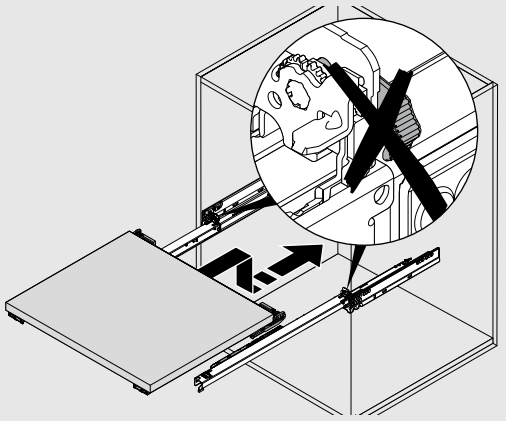

8

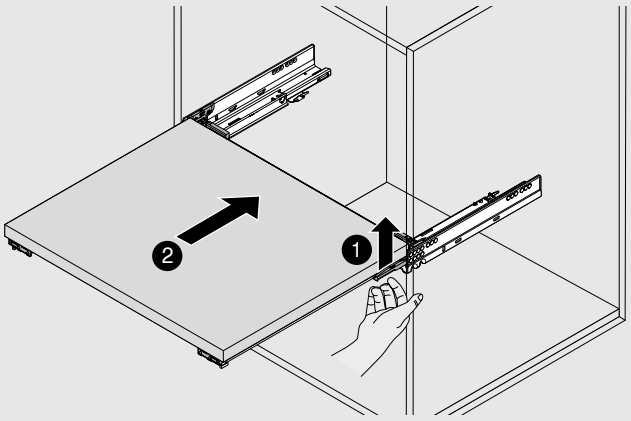

9

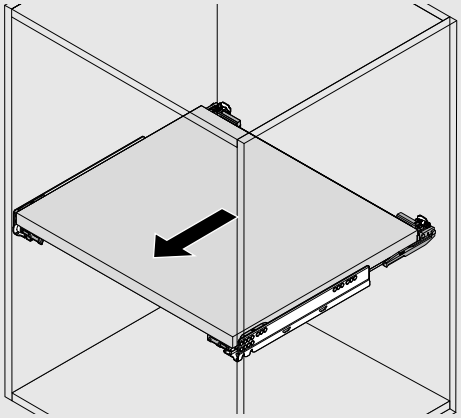

10

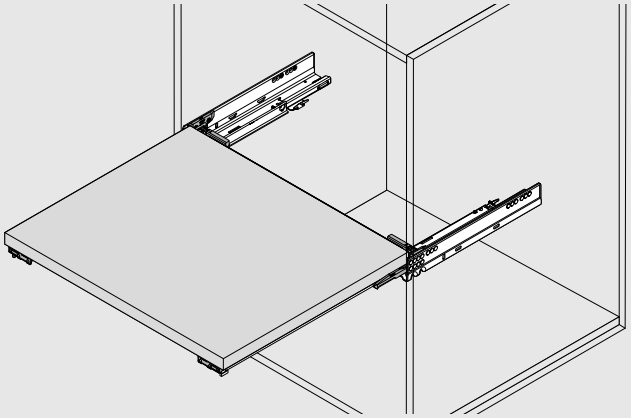

MD-067/3 · 03.22 · © Copyright by Blum

7

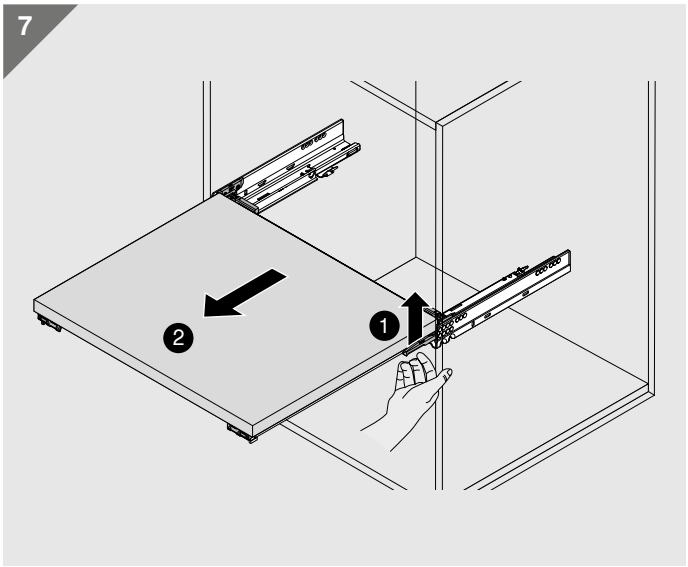

8

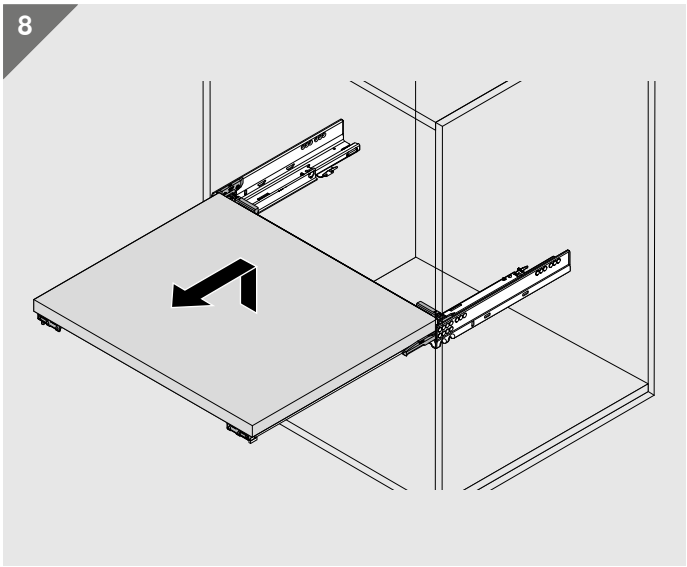

MD-067/3 · 03.22 · © Copyright by Blum

Look for our FSC™-certified products

FSC™ C115115 www.fsc.org

MD-067/3 · 03.22 · © Copyright by Blum

Julius Blum GmbH
Furniture Fittings Mfg.
6973 Höchst, Austria
Tel.: +43 5578 705-0
Fax: +43 5578 705-44
E-mail: info@blum.com
www.blum.com

Our sites in Austria, Poland and China are certified to the international standards mentioned below.
Our site in the USA is certified to ISO 9001.
Our site in Brazil is certified to ISO 9001, ISO 14001 and ISO 45001.

ISO 9001 Certified Quality System

ISO 14001 Certified Environmental System

ISO 50001 Certified Energy System

blum®