110° hinge

Web code DQDELA

Planning

Hinge dimensions and gap calculation based on factory setting (mounting plate spacing = 0 mm)

Hinge and front protrusion at full opening angle

Overlay application

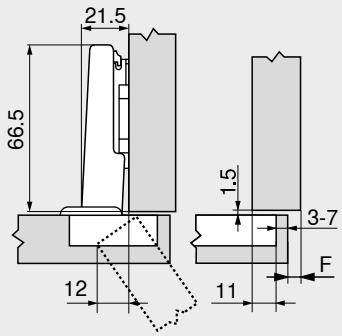

F Gap

Dual application

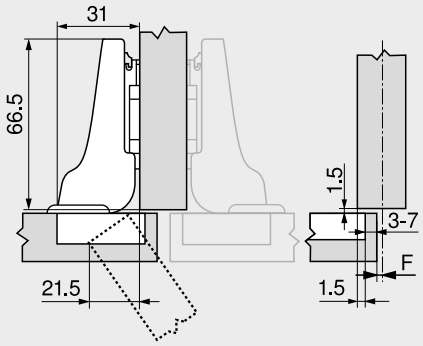

Inset application

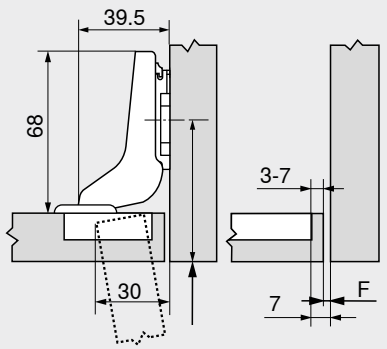

Move back fixing position of mounting plate by front thickness FD +1.5 mm

Drilling distance TB

MD	Front overlay FA (mm)													
	5	6	7	8	9	10	11	12	13	14	15	16	17	18
0										3	4	5	6	7
3							3	4	5	6	7			
6				3	4	5	6	7						
9	3	4	5	6	7									

MD Mounting plate spacing (mm)

MD	Front overlay FA (mm)													
	-4.5	-3.5	-2.5	-1.5	-0.5	0.5	1.5	2.5	3.5	4.5	5.5	6.5	7.5	8.5
0										3	4	5	6	7
3							3	4	5	6	7			
6				3	4	5	6	7						
9	3	4	5	6	7									

MD Mounting plate spacing (mm)

MD	Front overlay FA (mm)								
	–7	–6	–5	–4	–3	–2	–1	0	
0				3	4	5	6	7	
3	3	4	5	6	7				
6									
9									

MD Mounting plate spacing (mm)

Minimum gap F for fronts with a front radius (R = 1 mm) based on the factory setting



Drilling distance TB (mm)	Front thickness FD (mm)											
	16	18	19	20	21	22	23	24	25	26	28	30
3	0.5	0.8	1.0	1.2	1.5	1.8	2.2	2.7	3.5	4.3	△	△
4	0.5	0.8	1.0	1.2	1.4	1.7	2.0	2.5	3.1	3.8	△	△
5	0.5	0.8	0.9	1.2	1.4	1.7	2.0	2.4	2.9	3.4	△	△
6	0.5	0.8	0.9	1.2	1.3	1.6	1.9	2.3	2.7	3.2	△	△
7	0.5	0.8	0.9	1.1	1.3	1.6	1.9	2.2	2.6	3.0	△	△
Additional for +2 mm side adjustment												
	+0.2	+0.4	+0.4	+0.5	+0.5	+0.5	+0.5	+0.5	+0.5	+0.5		

△ In these cases a trial is recommended

Adjustment

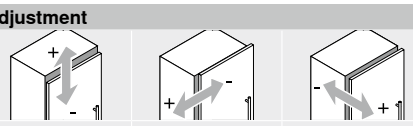

Max. ±3.0 mm
See mounting plates

±2.0 mm

+3.0 mm
–2.0 mm

Screw-on

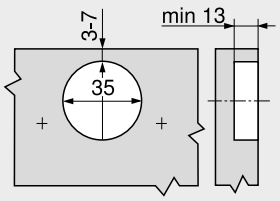

INSERTA | knock-in

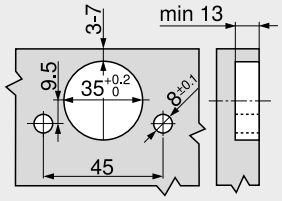

Hinge boss dimensions

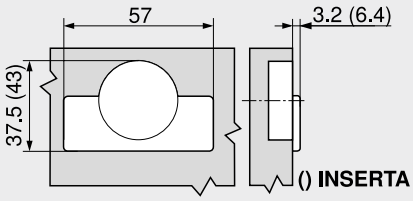

Reference pages

Overview – CLIP top BLUMOTION | CLIP top – hinges	71
Mounting plates	144
Accessories – hinge arm cover cap	151
Accessories – general	153
Overview – BLUMOTION for doors	157
Overview – TIP-ON for doors	171
Overview – assembly devices	591
More technical details	698

Assembly, removal and adjustment

Short URL
www.blum.com/a210