Profile/thick door hinge

Web code DQDITA

Planning

Hinge dimensions and gap calculation based on factory setting (mounting plate spacing = 0 mm)

Hinge and front protrusion at full opening angle

Overlay application

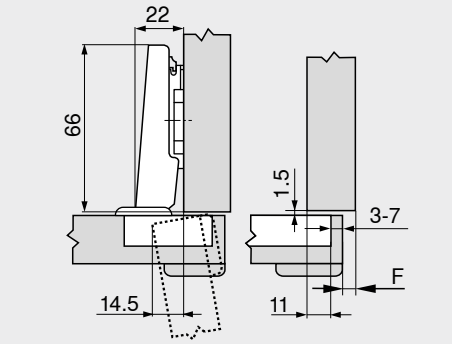

F Gap

Dual application

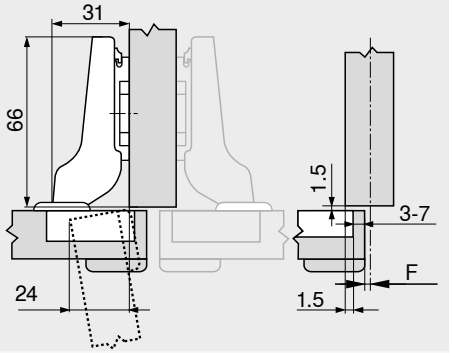

Inset application

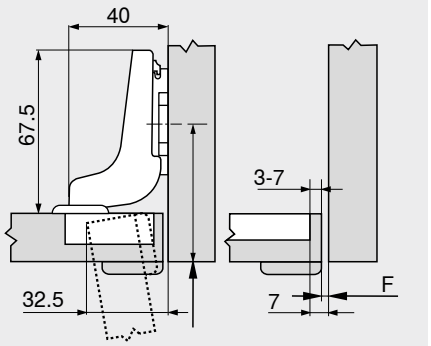

Move back fixing position of mounting plate by front thickness FD +1.5 mm

Drilling distance TB

MD	Front overlay FA (mm)													
	5	6	7	8	9	10	11	12	13	14	15	16	17	18
0										3	4	5	6	7
3							3	4	5	6	7			
6				3	4	5	6	7						
9	3	4	5	6	7									

MD Mounting plate spacing (mm)

MD	Front overlay FA (mm)													
	–4.5	–3.5	–2.5	–1.5	–0.5	0.5	1.5	2.5	3.5	4.5	5.5	6.5	7.5	8.5
0										3	4	5	6	7
3							3	4	5	6	7			
6				3	4	5	6	7						
9	3	4	5	6	7									

MD Mounting plate spacing (mm)

MD	Front overlay FA (mm)								
	–7	–6	–5	–4	–3	–2	–1	0	
0				3	4	5	6	7	
3	3	4	5	6	7				
6									
9									

MD Mounting plate spacing (mm)

Minimum gap F for fronts with a front radius (R = 1 mm) based on the factory setting



Drilling distance TB (mm)	Front thickness FD (mm)											
	16	18	19	20	22	24	26	28	29	30	31	32
3	0.2	0.3	0.4	0.5	0.8	1.0	1.5	1.9	2.8	3.6	4.5	5.4
4	0.2	0.3	0.4	0.5	0.7	1.0	1.4	1.8	2.5	3.1	4.0	4.8
5	0.2	0.3	0.4	0.5	0.7	1.0	1.4	1.8	2.3	2.7	3.5	4.3
6	0.2	0.3	0.4	0.5	0.7	1.0	1.4	1.8	2.2	2.5	3.2	3.8
7	0.2	0.3	0.4	0.5	0.7	0.9	1.4	1.7	2.1	2.4	3.0	3.5
Additional for +2 mm side adjustment												
	+0.1	+0.2	+0.2	+0.2	+0.3	+0.4	+0.4	+0.5	+0.4	+0.4	+0.4	+0.3

Adjustment

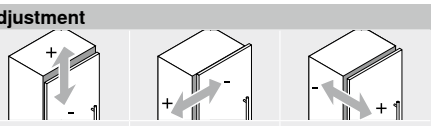

Max. ±3.0 mm
See mounting plates

±2.0 mm

+3.0 mm
–2.0 mm

Screw-on

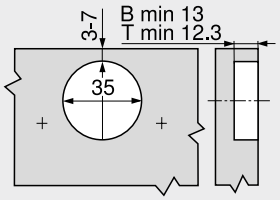

B CLIP top BLUMOTION
T CLIP top

INSERTA | knock-in

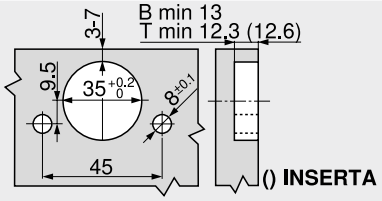

B CLIP top BLUMOTION
T CLIP top

Hinge boss dimensions

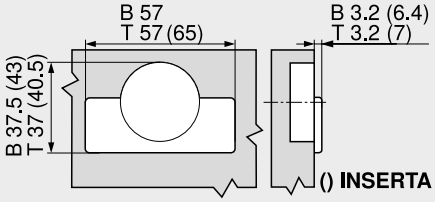

B CLIP top BLUMOTION
T CLIP top

Reference pages

Overview – CLIP top BLUMOTION | CLIP top – hinges	71
Mounting plates	144
Accessories – hinge arm cover cap	151
Accessories – general	153
Overview – BLUMOTION for doors	157
Overview – TIP-ON for doors	171
Overview – assembly devices	591
More technical details	698

Assembly, removal and adjustment

Short URL
www.blum.com/a210