MERIVOBOX

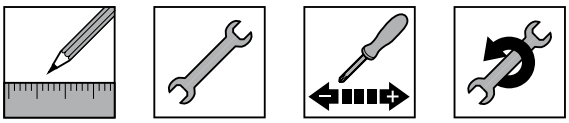

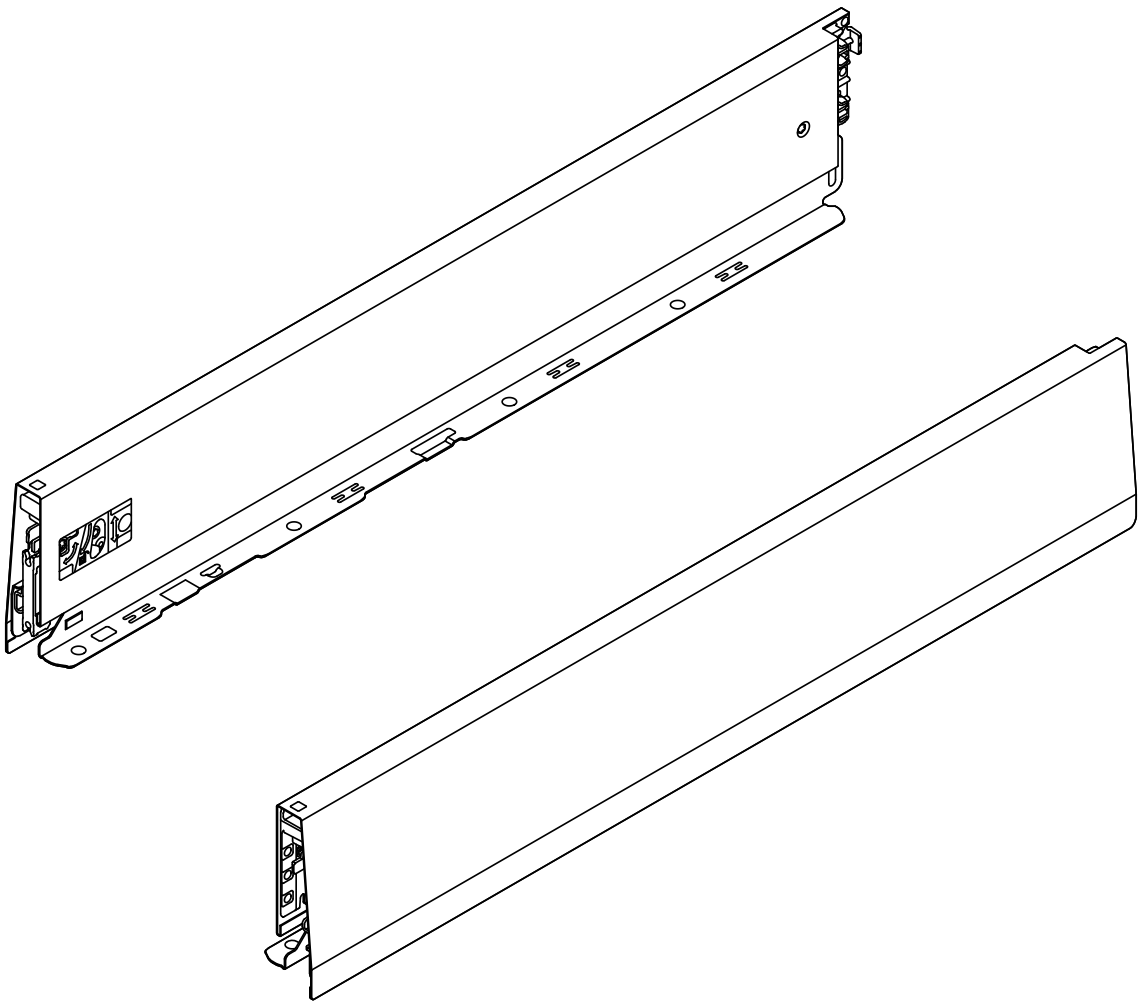

www.blum.com

Standardanwendungen | Standard applications | Applications standard | Applicazioni standard | Aplicaciones estándar | Rozwiązania standardowe | Стандартные конструкции | 标准应用

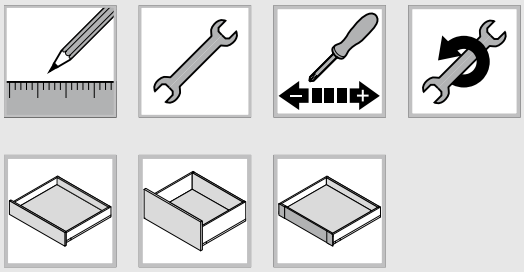

Sonderanwendungen | Special applications | Applications spéciales | Applicazioni speciali | Aplicaciones especiales | Rozwiązania specjalne | Специальные конструкции | 特殊应用

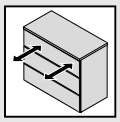

http://www.blum.com/merivobox



Planung | Planning | Planification | Progettazione | Planificación | Planowanie | Проектирование | 设计

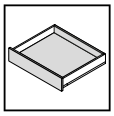

Schubkasten | Drawer | Tiroir | Cassetto | Cajón | Szuflada | Стандартный ящик | 低抽



Montage | Assembly | Montage | Montaggio | Montaje | Montaż | Монтаж | 安装

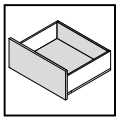

Frontauszug | High fronted pull-out | Bloc-tiroir | Cassettone | Cacerolero | Szuflada z wysokim frontem | Ящик с высоким фасадом | 高抽



Einstellung | Adjustment | Réglage | Regolazione | Ajuste | Regulacja | Регулировка | 调节

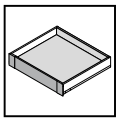

Innenschubkasten | Inner drawer | Tiroir à l'anglaise | Cassetto interno | Cajón interior | Szuflada wewnętrzna | Внутренний ящик | 内低抽



Demontage | Removal | Démontage | Smontaggio | Desmontaje | Demontaż | Демонтаж | 拆卸

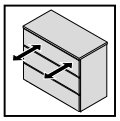

Seitenstabilisierung | Side stabiliser | Stabilisateur latéral | Stabilizzatore laterale | Estabilizador lateral | Stabilizacja boczna | Боковой стабилизатор | 侧边稳定器



Klickbar | Clickable | Cliquable | Cliccabile | Se puede hacer clic | Klikalny | Кликабельно | 可点击

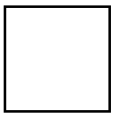

Nicht Klickbar | Not clickable | Pas cliquable | Non cliccabile | No se puede hacer clic | Nie klikalny | Некликабельно | 不可点击



Zurück | Back | Retour | Indietro | Hacia atrás | Wstecz | Назад | 返回

MD-053/5 · 06.22 · © Copyright by Blum

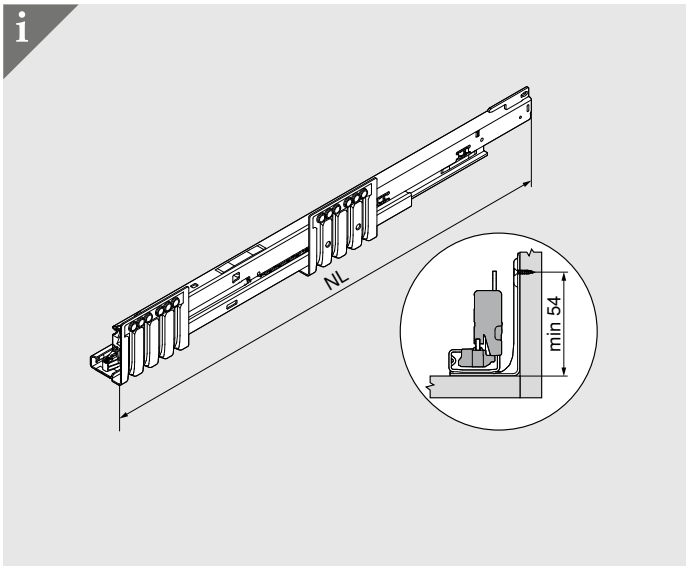

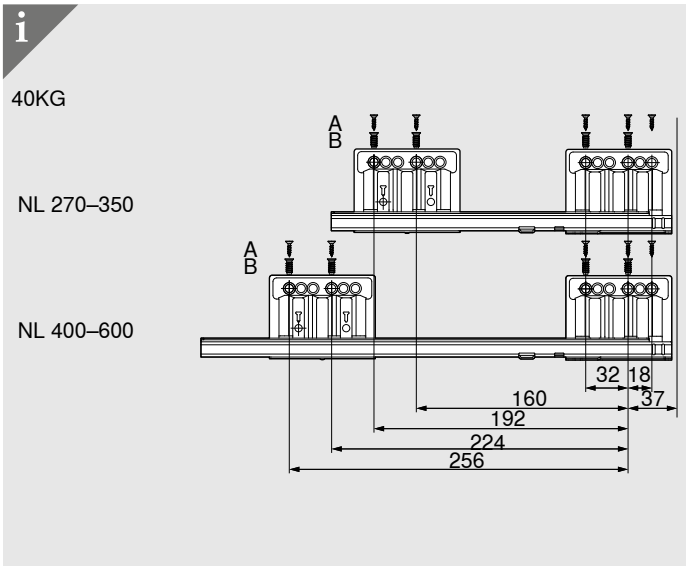

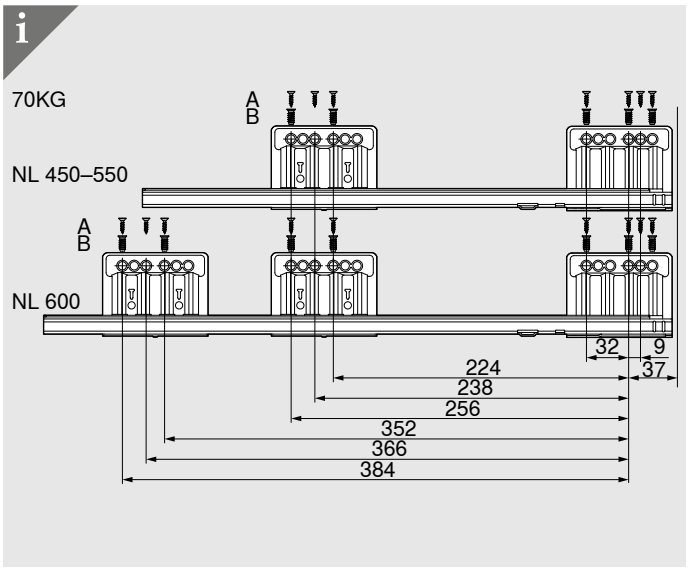

MD-053/5 · 06.22 · © Copyright by Blum

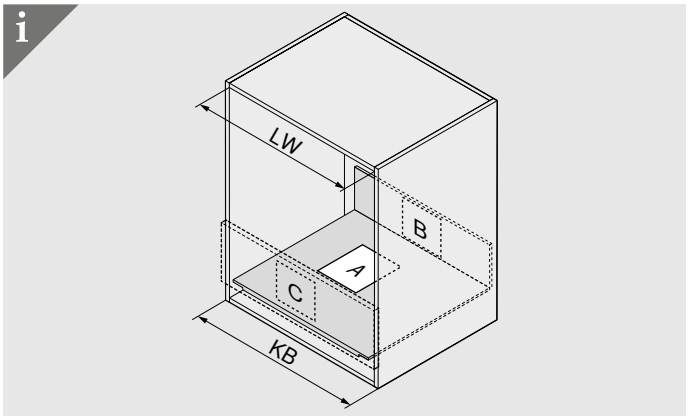

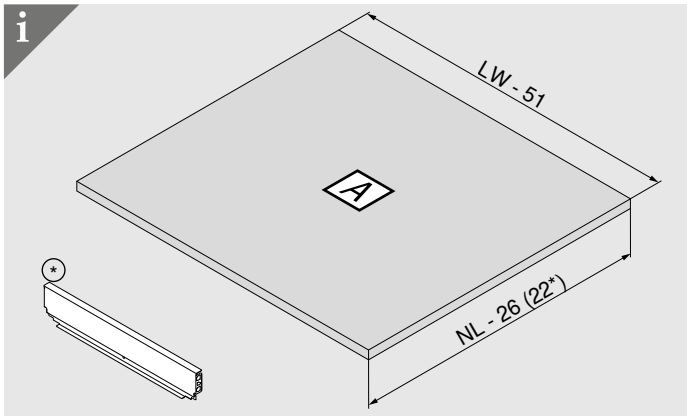

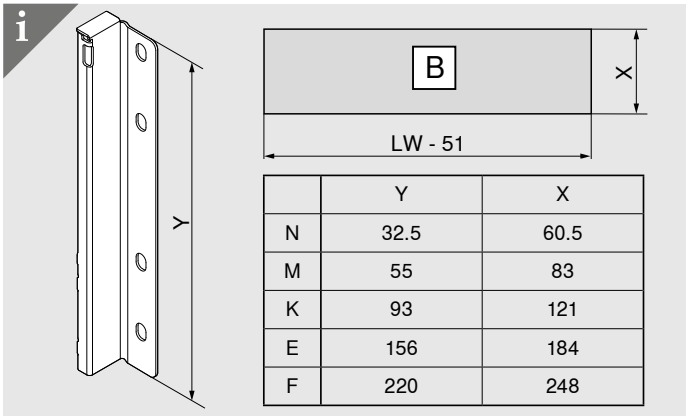

	Y	X
N	32.5	60.5
M	55	83
K	93	121
E	156	184
F	220	248

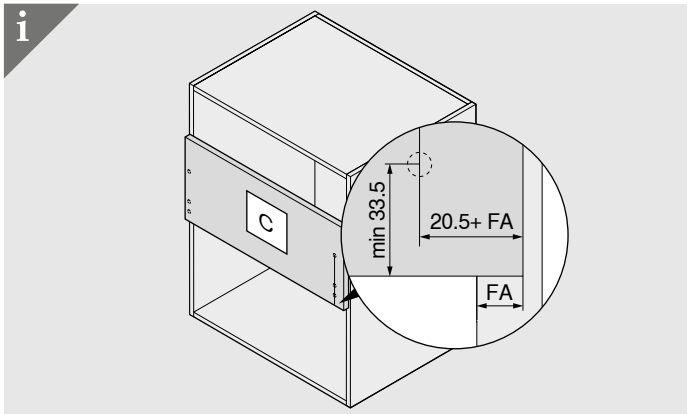

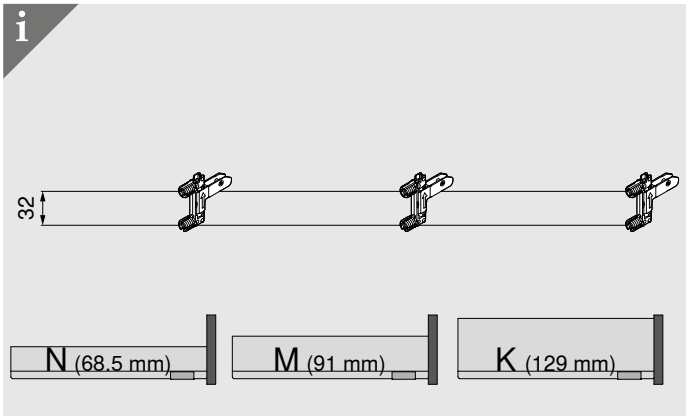

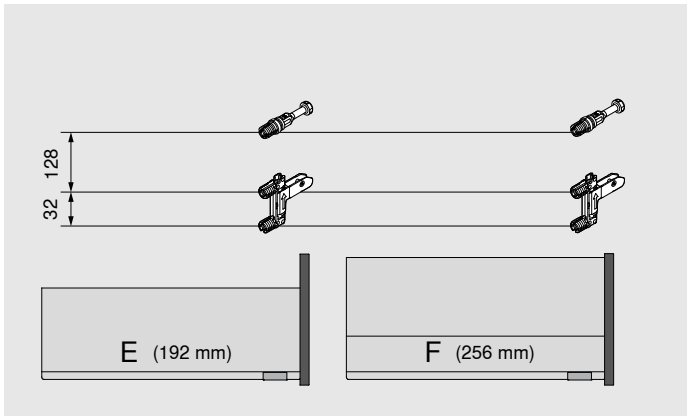

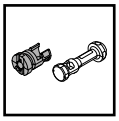

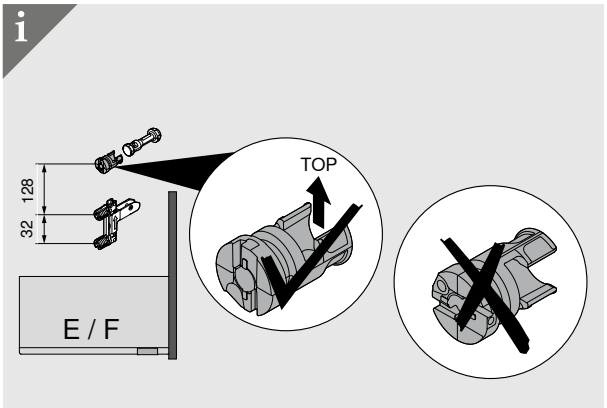

MD-053/5 · 06.22 · © Copyright by Blum

1 (3.5 x 15) (3.5 x 15)

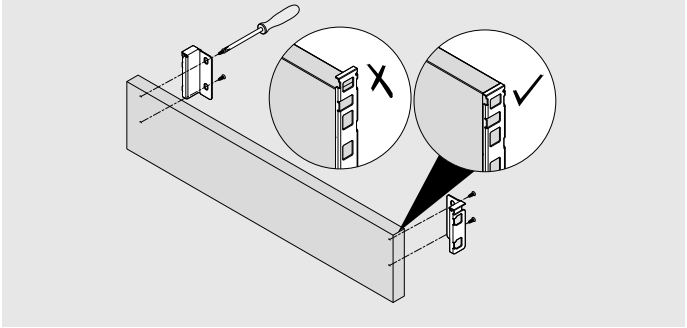

2

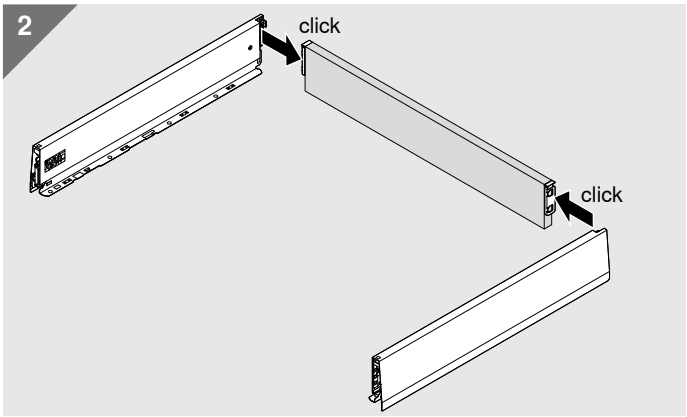

3

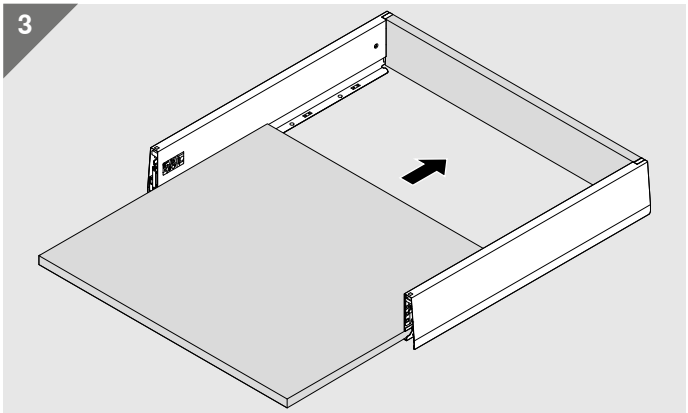

4 (3.5 x 15) (3.5 x 15)

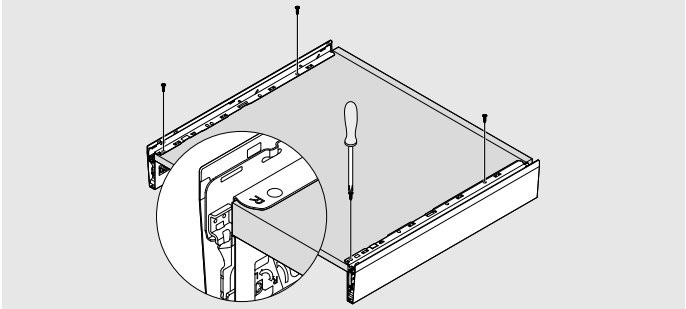

5

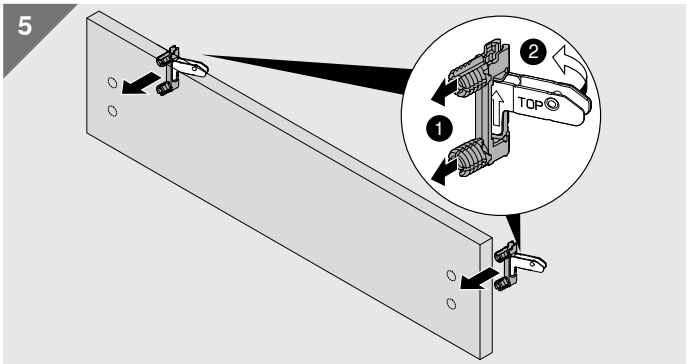

6

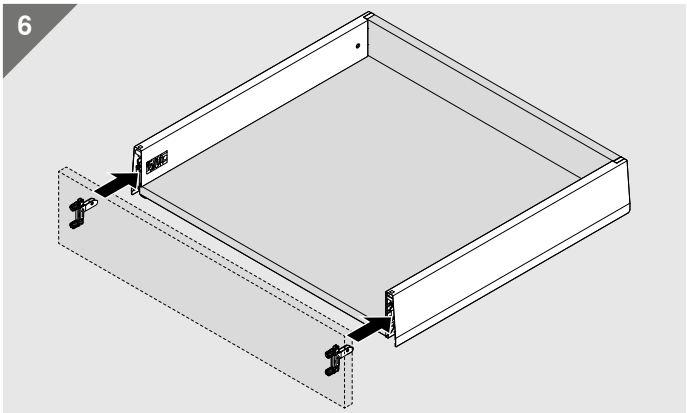

7

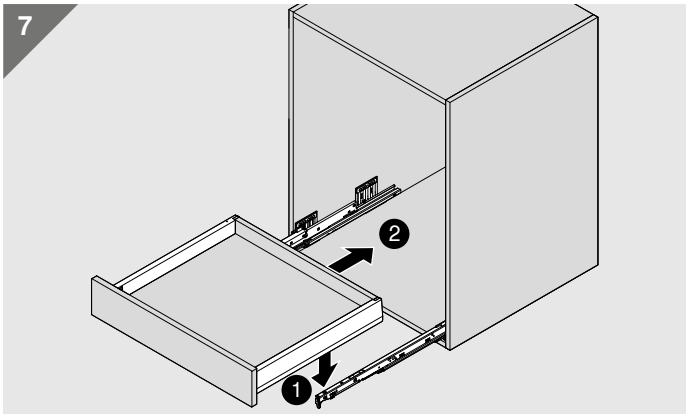

MD-053/5 · 06.22 · © Copyright by Blum

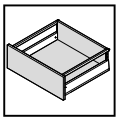

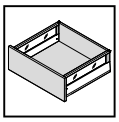

1

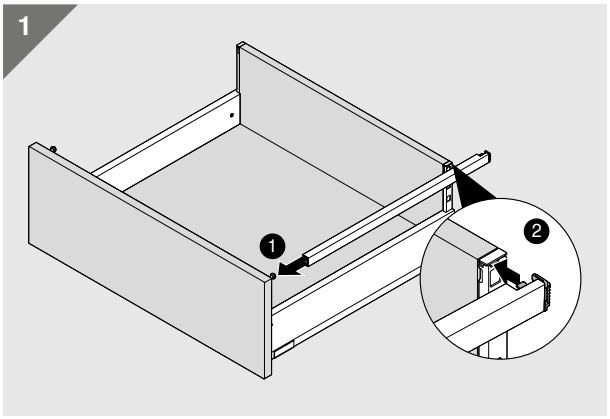

2

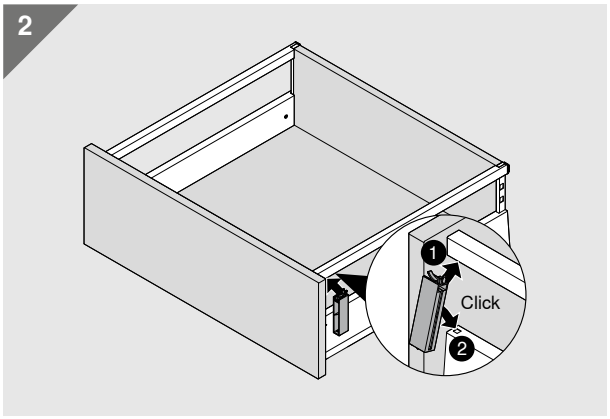

3

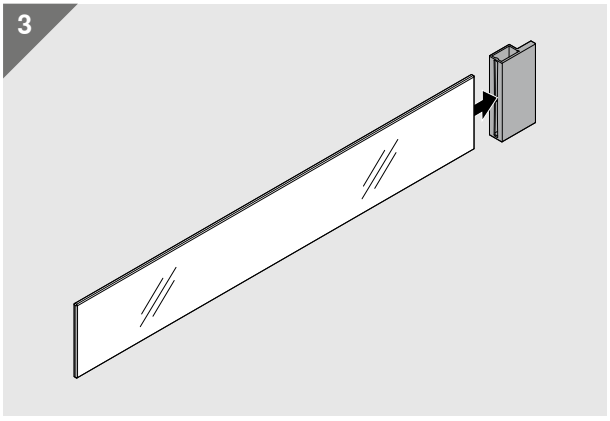

4

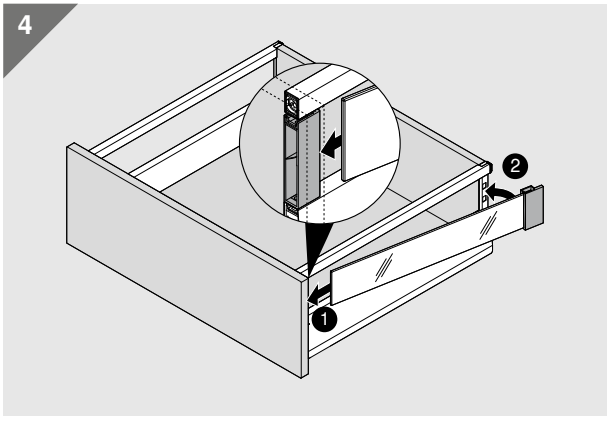

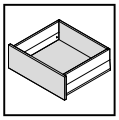

1

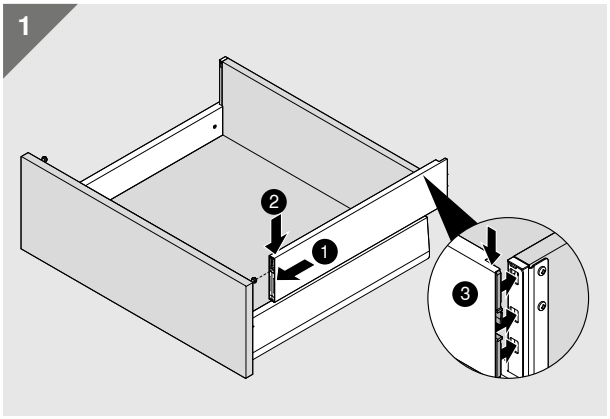

MD-053/5 · 06.22 · © Copyright by Blum

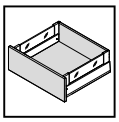

1

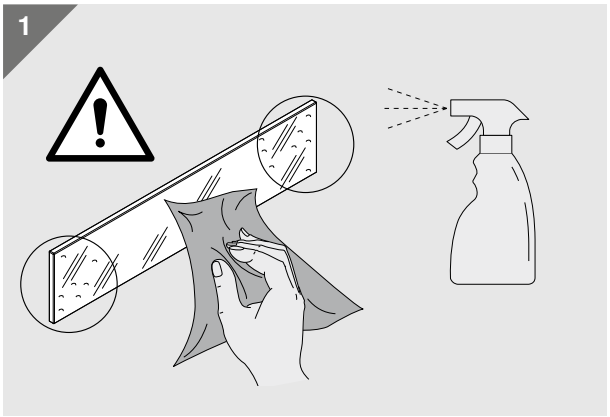

2

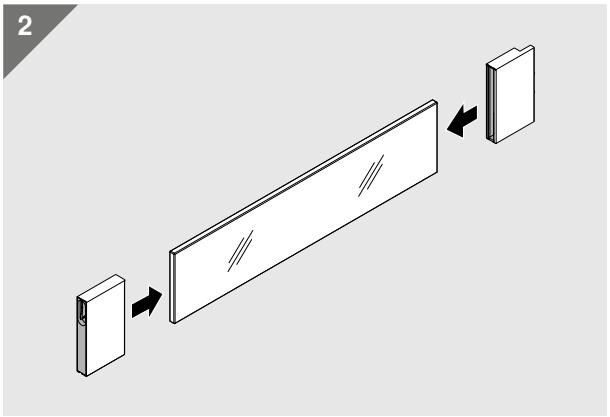

3

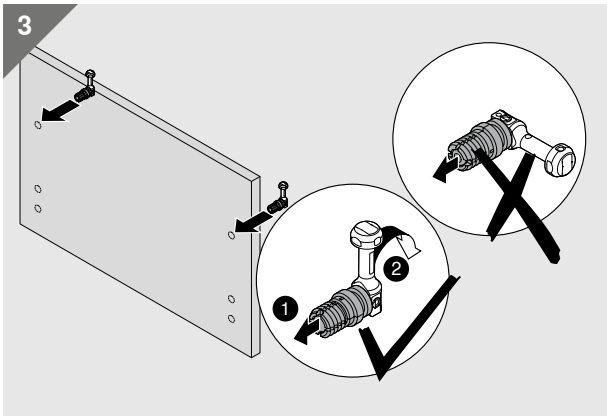

4

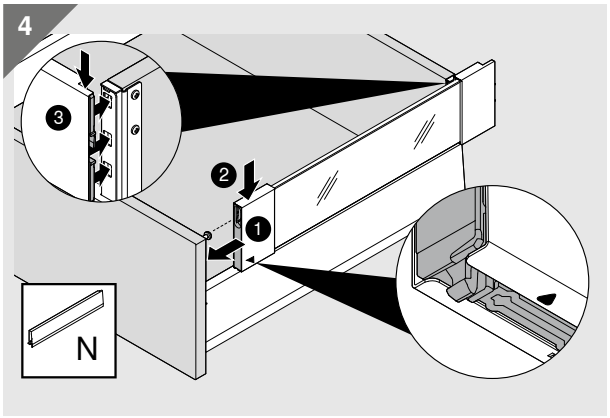

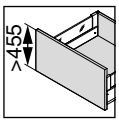

3

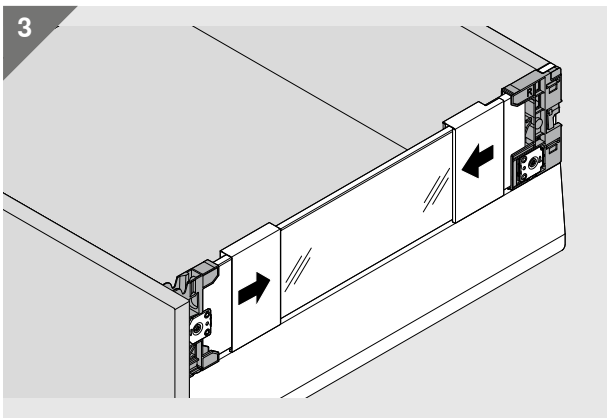

4

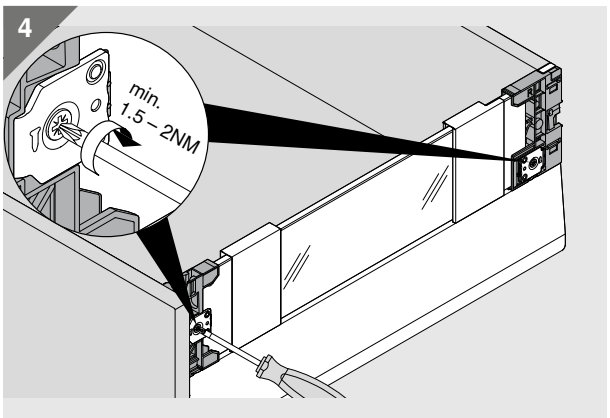

5

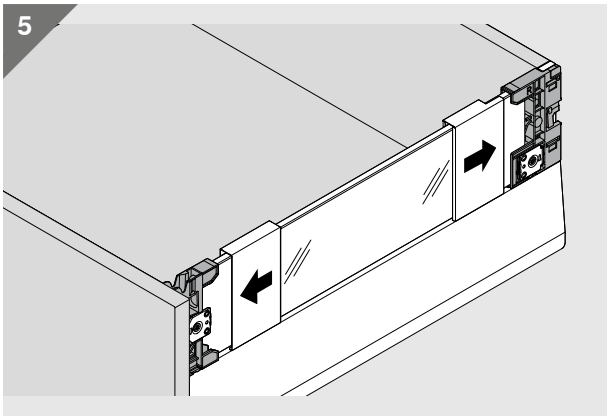

MD-053/5 · 06.22 · © Copyright by Blum

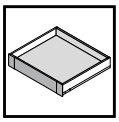

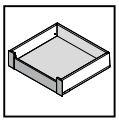

1

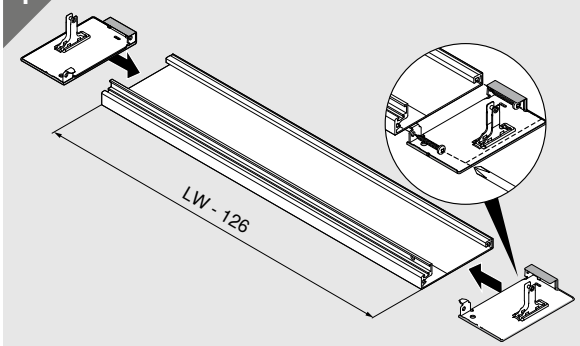

2

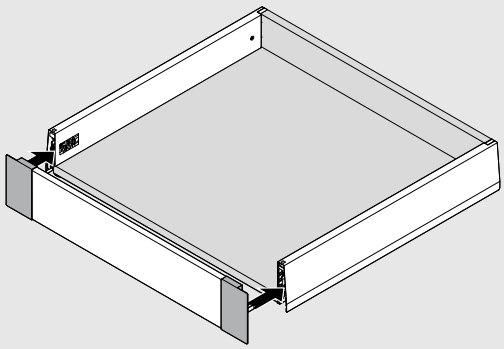

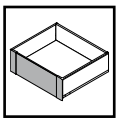

1

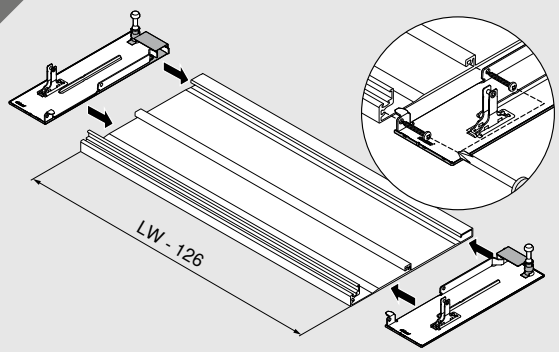

2

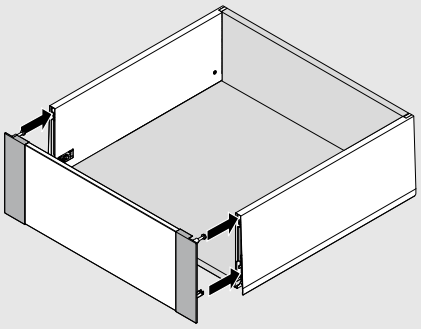

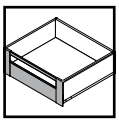

1

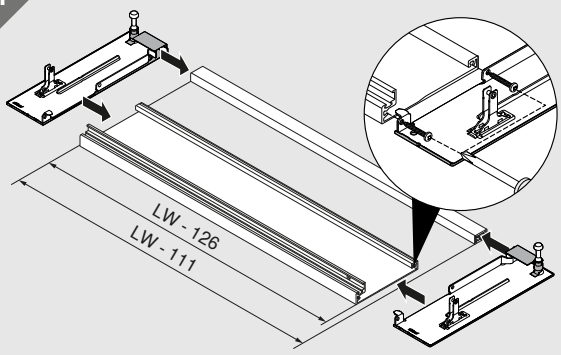

2

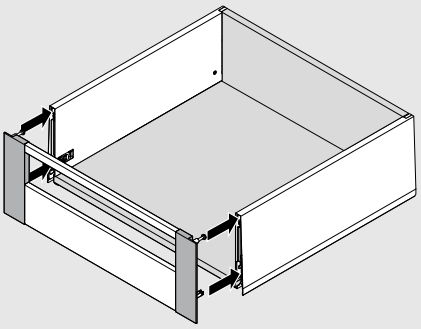

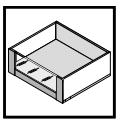

1

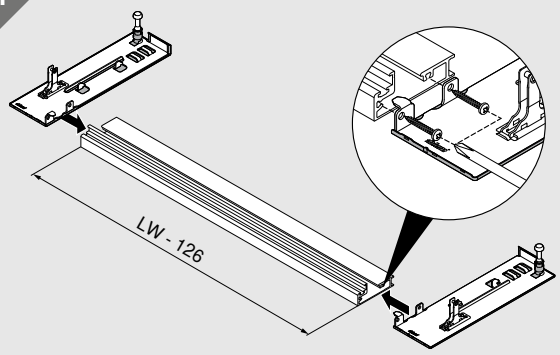

2

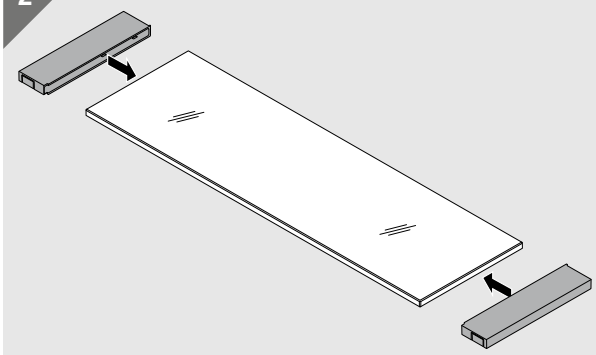

MD-053/5 · 06.22 · © Copyright by Blum

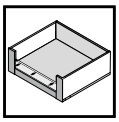

3

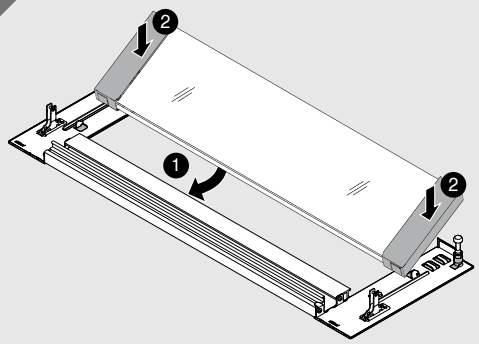

4

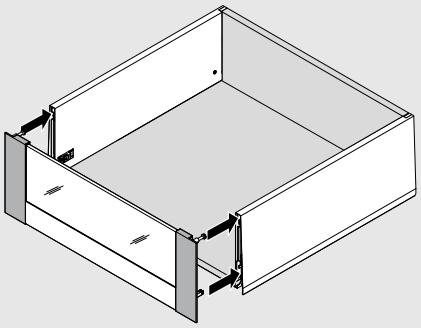

1

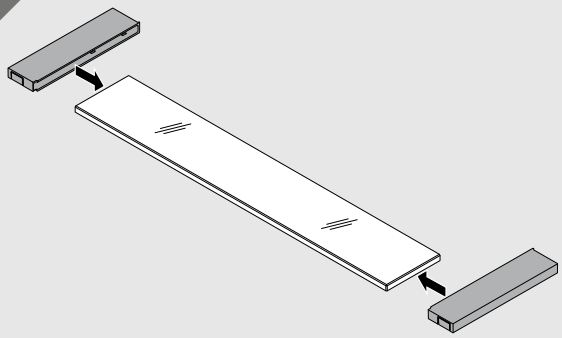

2

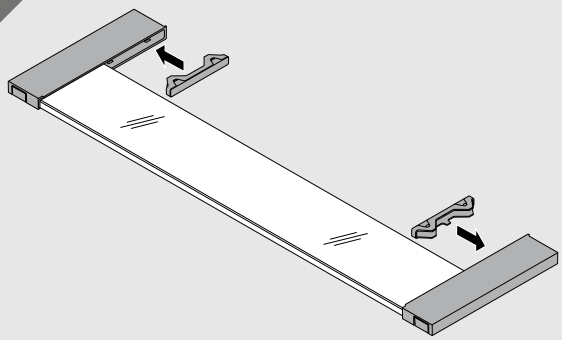

3

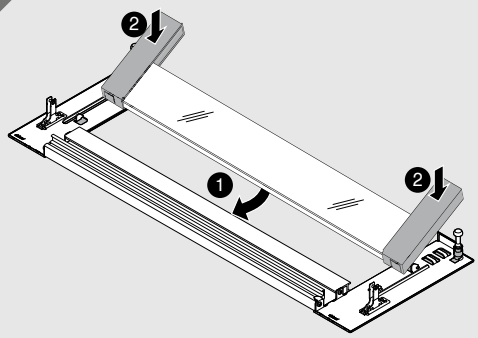

4

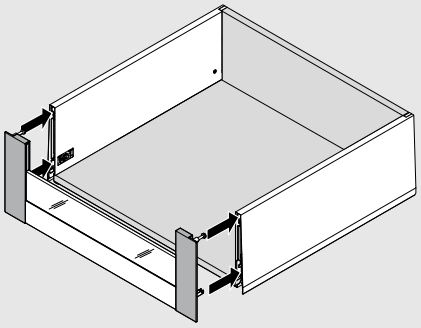

i **KB ≥ 600 mm**

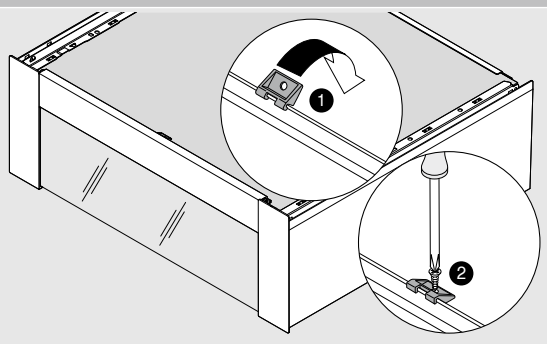

MD-053/5 · 06.22 · © Copyright by Blum

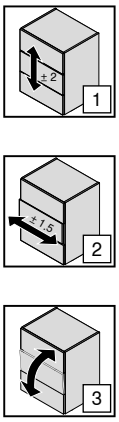

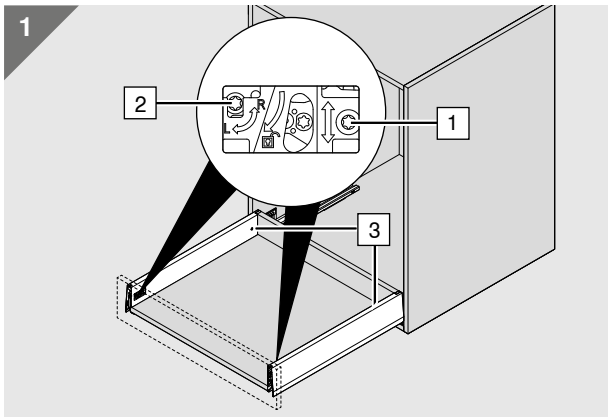

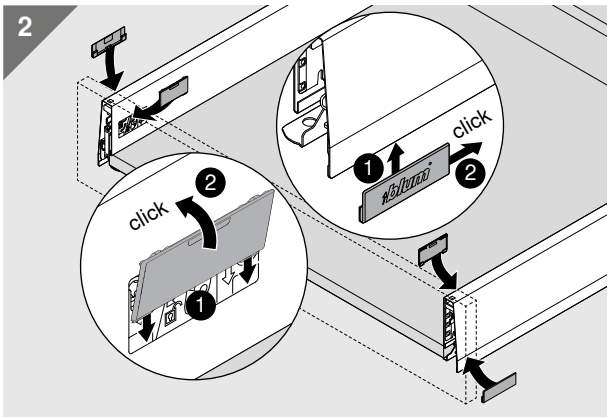

MD-053/5 · 06.22 · © Copyright by Blum

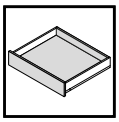

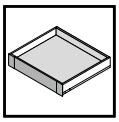

1

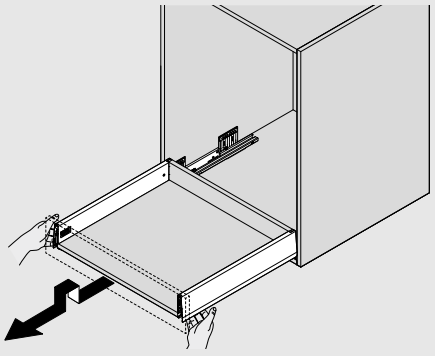

2

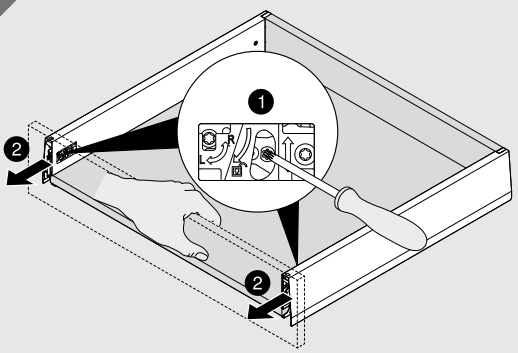

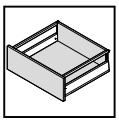

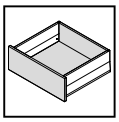

1

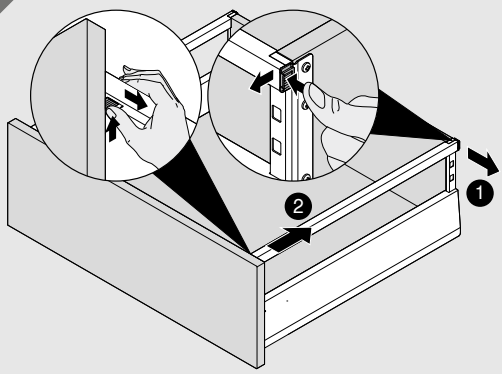

1

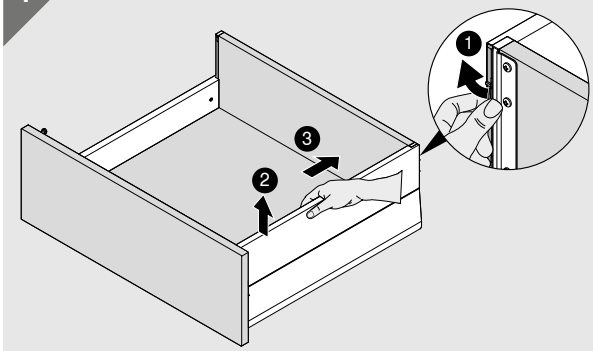

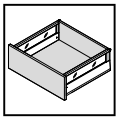

1

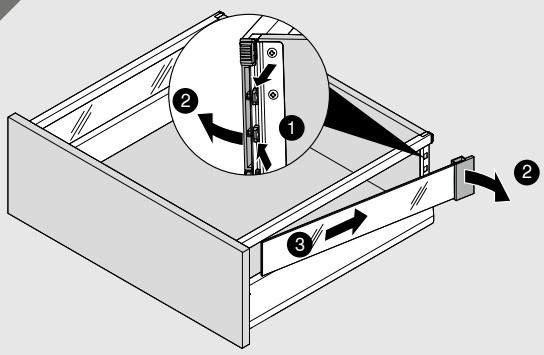

2

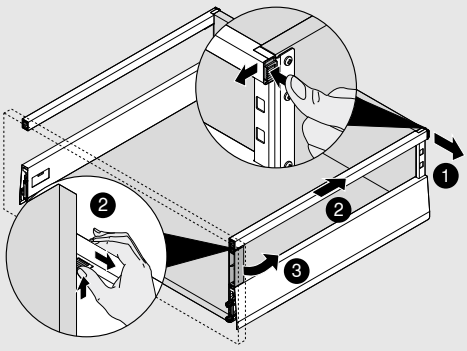

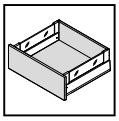

1

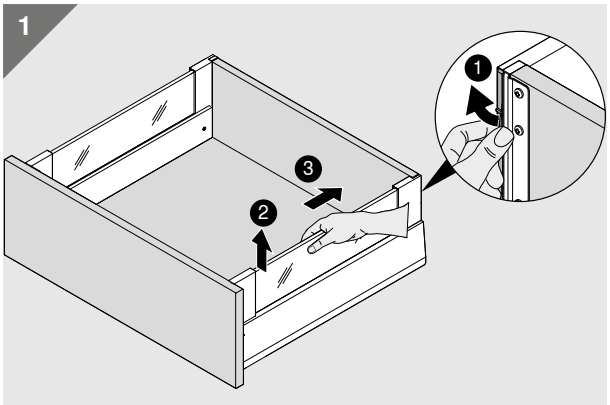

MD-053/5 · 06.22 · © Copyright by Blum

Look for our FSC™-certified products

FSC™ C115115 www.fsc.org

MD-053/5 · 06.22 · © Copyright by Blum

Julius Blum GmbH
Furniture Fittings Mfg.
6973 Höchst, Austria
Tel.: +43 5578 705-0
Fax: +43 5578 705-44
E-mail: info@blum.com
www.blum.com

Our sites in Austria, Poland and China are certified to the international standards mentioned below.
Our site in the USA is certified to ISO 9001.
Our site in Brazil is certified to ISO 9001, ISO 14001 and ISO 45001.

ISO 9001 Certified Quality System

ISO 14001 Certified Environmental System

ISO 50001 Certified Energy System

blum®