Wooden fronts and wide alu frames

Web code DQD8YM

Planning

Symmetrical

Drilling position

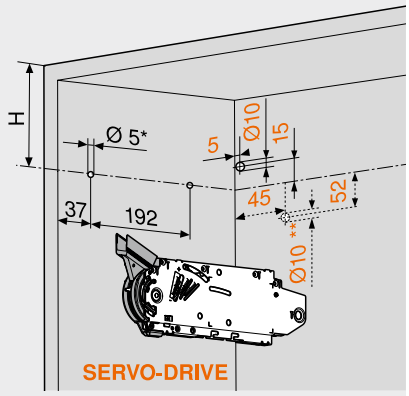

Cabinet height KH (mm)	H (mm)
480–549	KH x 0.3 – 28
550–1040	KH x 0.3 – 57

4 x chipboard screws Ø 4 x 35 mm
Drilling for SERVO-DRIVE distribution cable, left only
* Drilling depth 5 mm
** Alternative drilling

Space requirement

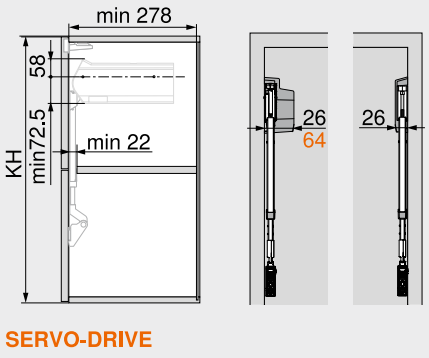

KH Cabinet height

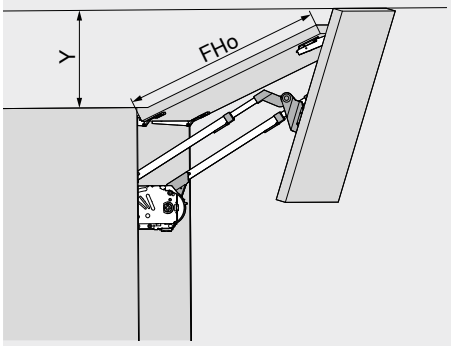

Opening angle stop	Y (mm)
Without	FHo x 0.44 + 38
104°	FHo x 0.24 + 34
83°	0

FHo Upper front height

Front assembly

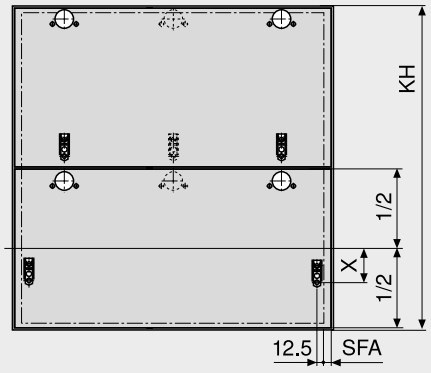

Cabinet height KH (mm)	X (mm)	
	177H3100 | 177H3100E | 177H3100E10 | 177H5100 | 175H3100 | 175H4100	175H5400 | 177H5400E
480–549	70	68
550–1040	47	45

SFA Front overlay of the side panel

CLIP top 120° hinge

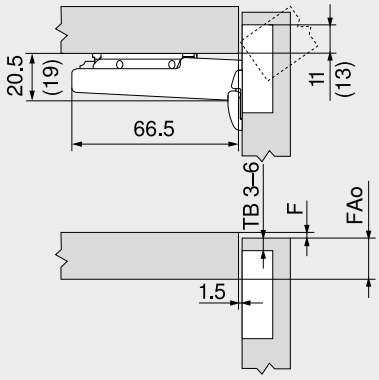

TB Drilling distance
F Gap
FAo Upper front overlay
() CLIP top 120° special hinge

Drilling distance TB

MD	Front overlay FA (mm)												
	5	6	7	8	9	10	11	12	13	14	15	16	17
0										3	4	5	6
3							3	4	5	6			
6				3	4	5	6						
9	3	4	5	6									

MD Mounting plate spacing (mm)
With the CLIP top 120° special hinge, the front overlay FA is always 2 mm larger

CLIP top centre hinge

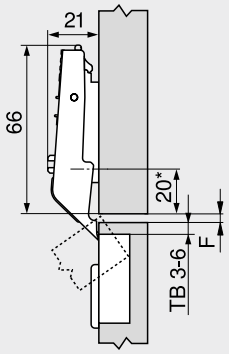

TB Drilling distance
F Min. gap 1.5 mm
* 37 mm for cruciform mounting plates (37/32)

Drilling distance TB

MD	Horizontal gap F (mm) between fronts			
	3	4	5	6
0	6	5	4	3
3				
6				
9				

MD Mounting plate spacing (mm)

Screw-on

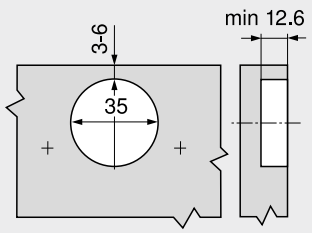

INSERTA | EXPANDO

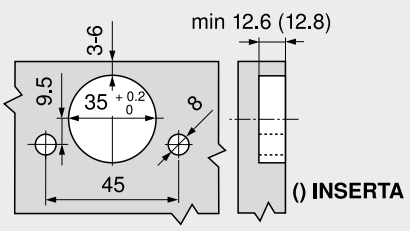

Hinge boss dimensions

