Pull-out shelf lock

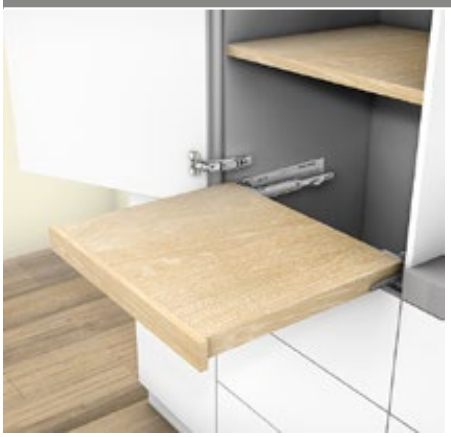

- Can be used with **MOVENTO full extensions**
- Cannot be used with runners for base mounting
- Can be combined with **BLUMOTION**, **TIP-ON BLUMOTION** and **TIP-ON**
- Two-sided locking mechanism
- Secure hold
- Pull-out shelf lock can be released with one hand thanks to synchronisation shaft
- Easy assembly – fittings serve as template
- Runners are attached to standard fixing positions
- Max. cabinet width 1200 mm

Space requirement

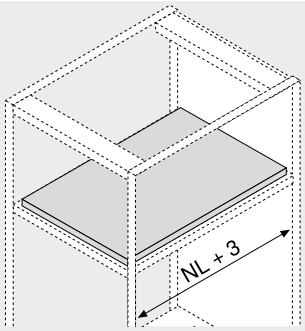

NL Nominal length

Order information

12 Pull-out shelf lock

Runners	Colour	Part no.
760H | 766H	Orion grey matt	295H5700

Consisting of:

12a	2 x	Locking mechanism unit Fixing only possible with chipboard screws
12b	2 x	Latching element Fixing possible with chipboard and system screws
–	1 x	Installation instructions

Note

During assembly of the pull-out shelf lock, make sure that you leave the tilt adjustment at the factory setting!
We recommend using a side stabiliser with wide pull-outs with a short nominal length. This improves the engagement of the locking unit.

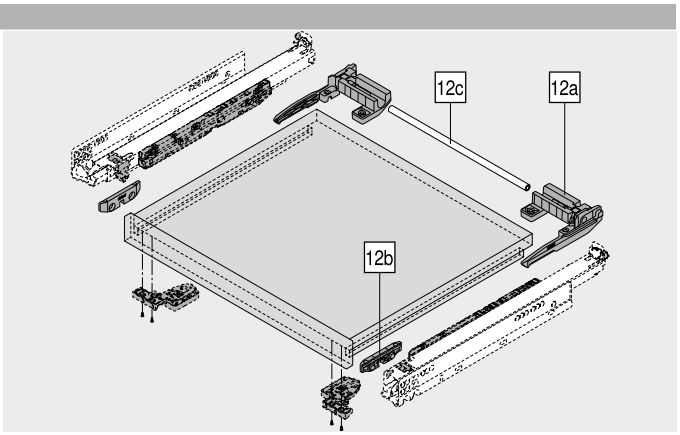

12c Synchronisation linkage

Version	Length (mm)	Part no.
Round	1089	ZST.1089W

Pull-out shelf lock can be released with one hand thanks to synchronisation shaft

Cutting Internal cabinet width LW – 87 mm ±1 mm

Alternative to 12c

12c Synchronisation linkage

Version	Length (mm)	Part no.
Round	1160	ZST.1160W

Pull-out shelf lock can be released with one hand thanks to synchronisation shaft

Cutting Internal cabinet width LW – 87 mm ±1 mm

Accessories

– Chipboard screws

Diameter (mm)	Length (mm)	Part no.
Ø 3.5	15.0	609.1500

– System screw

Diameter (mm)	Length (mm)	Part no.
Ø 6.0	14.5	661.1450.HG

Planning

POS processing

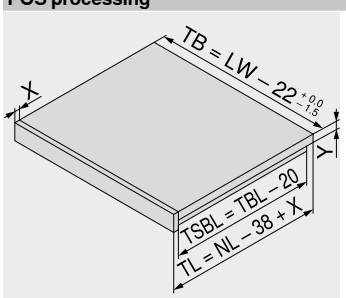

NL	Nominal length
LW	Internal cabinet width
TB	Shelf width
TL	Shelf length
TBL	Pull-out shelf base length
TSBL	Pull-out shelf side panel length
X	Pull-out shelf front piece thickness
Y	Pull-out shelf base thickness

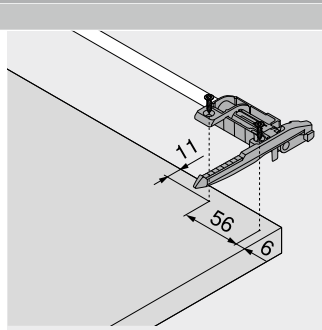

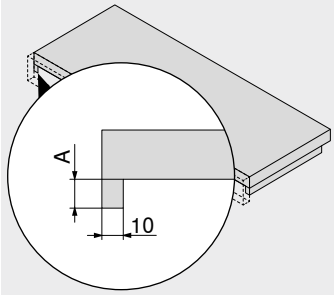

Single pull-out shelf base	
Runners	**A (mm)**
760H | 766H	12–15

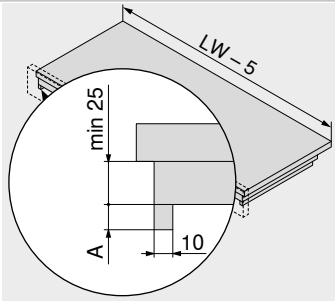

Double pull-out shelf base	
Runners	**A (mm)**
760H | 766H	12–15