Pull-out shelf lock

Planning

MOVENTO with TIP-ON – 760H | 766H

Space requirement in cabinet

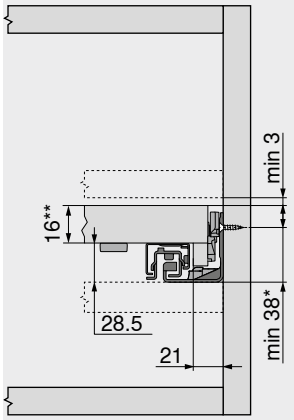

* +1 mm for assembly of the runners prior to cabinet assembly
** Min. 25 mm when installed in compartment

Pull-out shelf

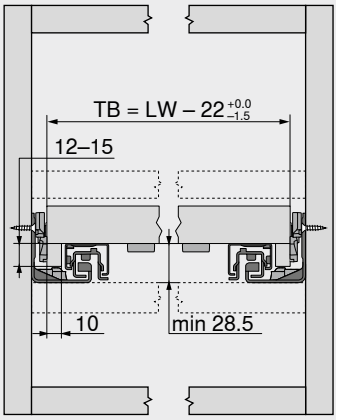

TB Shelf width
LW Internal cabinet width
Limited side adjustment

Pull-out shelf

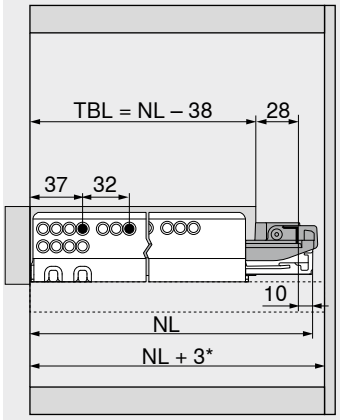

TBL Pull-out shelf base length
NL Nominal length
* Additional +12 mm with side stabilisation

POS inset application

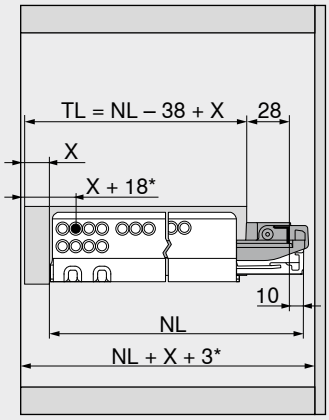

TL Shelf length
NL Nominal length
X Pull-out shelf front piece thickness
* Additional +3 mm with depth adjustment or additional +4 mm with TIP-ON

Reference pages

Overview	417
TIP-ON BLUMOTION for MOVENTO	434
TIP-ON for MOVENTO	440
Attachment of runners	432
E-SERVICES and assembly devices	590
More technical details	698

Pull-out shelf lock

Short URL
www.blum.com/i010

Assembly, removal and adjustment

Short URL
www.blum.com/a410