Pull-out shelf lock

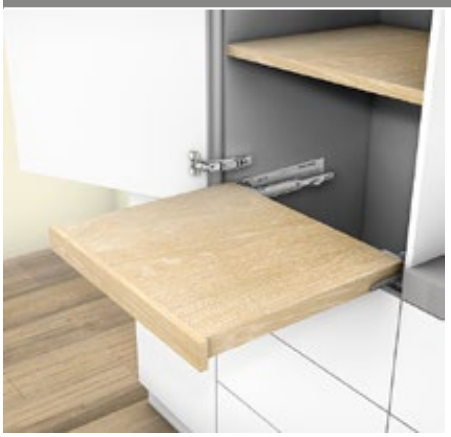

- Can be used with **TANDEM full extensions**
- Cannot be used with TANDEM single extensions
- Can be combined with **BLUMOTION** and **TIP-ON**
- Two-sided locking mechanism
- Secure hold
- Pull-out shelf lock can be released with one hand thanks to synchronisation shaft
- Easy assembly – fittings serve as template
- Runners are attached to standard fixing positions
- Max. cabinet width 1200 mm

Space requirement

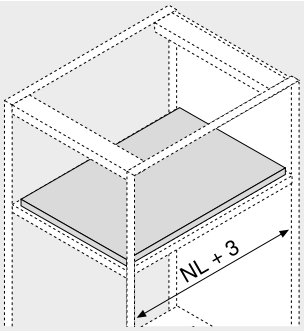

NL Nominal length

Order information

12 Pull-out shelf lock



Runners	Colour	Part no.
560H | 561H	Orion grey matt	295H5700
560F | 561F		295F5700

Consisting of:

12a	2 x	Locking mechanism unit Fixing only possible with chipboard screws
12b	2 x	Latching element Fixing possible with chipboard and system screws
–	1 x	Installation instructions

Note

During assembly of the pull-out shelf lock, make sure that you leave the tilt adjustment at the factory setting!

We recommend using a side stabiliser with wide pull-outs with a short nominal length. This improves the engagement of the locking unit in combination with 560H | 561H.

12c Synchronisation linkage



Version	Length (mm)	Part no.
Round	1089	ZST.1089W

Pull-out shelf lock can be released with one hand thanks to synchronisation shaft

Cutting

560H | 561H	Internal cabinet width LW – 87 mm ±1 mm
560F | 561F	Internal cabinet width LW – 94 mm ±1 mm

Alternative to 12c

12c Synchronisation linkage



Version	Length (mm)	Part no.
Round	1160	ZST.1160W

Pull-out shelf lock can be released with one hand thanks to synchronisation shaft

Accessories

– Chipboard screws

Diameter (mm)	Length (mm)	Part no.
Ø 3.5	15.0	609.1500

– System screw

Diameter (mm)	Length (mm)	Part no.
Ø 6.0	14.5	661.1450.HG

Locking device feature – 560H | 560F

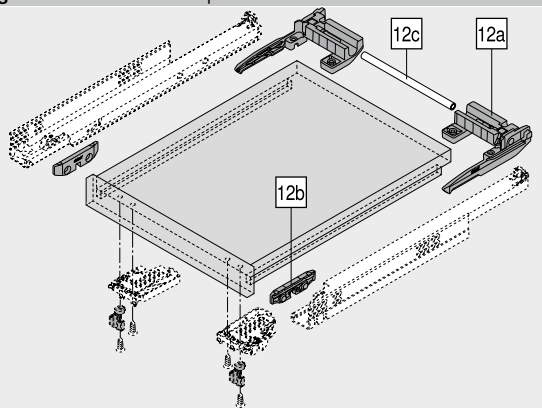

Hook and peg variant – 561H | 561F

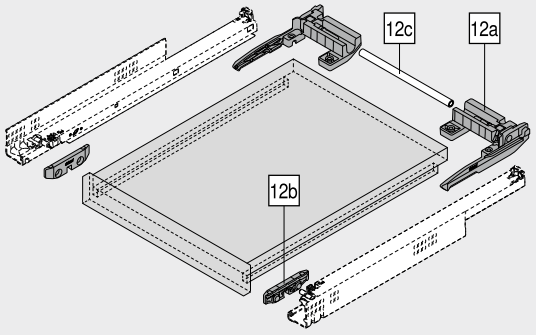

Planning

POS processing

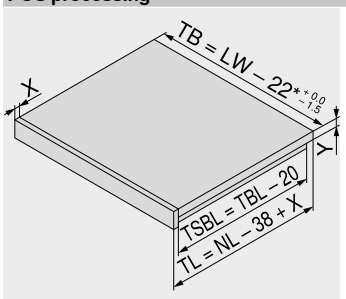

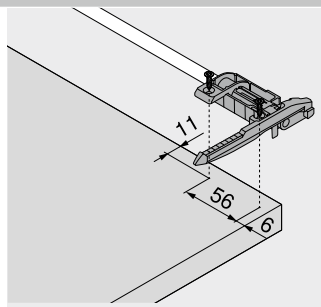

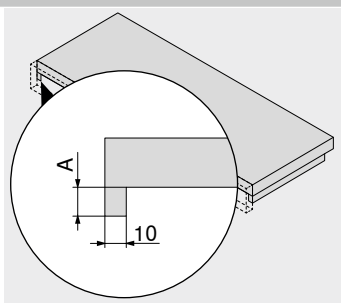

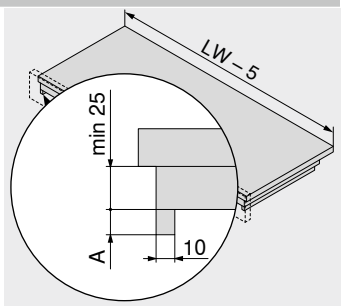

NL	Nominal length
LW	Internal cabinet width
TB	Shelf width
TL	Shelf length
TBL	Pull-out shelf base length
TSBL	Pull-out shelf side panel length
X	Pull-out shelf front piece thickness
Y	Pull-out shelf base thickness
*	29 mm with TANDEM 19 mm

Single pull-out shelf base

Runners	A (mm)
560H | 560F	12–15
561H | 561F	11–13

Double pull-out shelf base

Runners	A (mm)
560H | 560F	12–15
561H | 561F	11–13