Pull-out shelf lock

Planning

TANDEM – 560H

Space requirement in cabinet

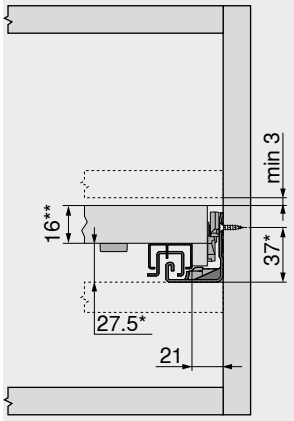

*	+3 mm with side stabiliser or +1 mm with TIP-ON
**	Min. 25 mm when installed in compartment

Pull-out shelf

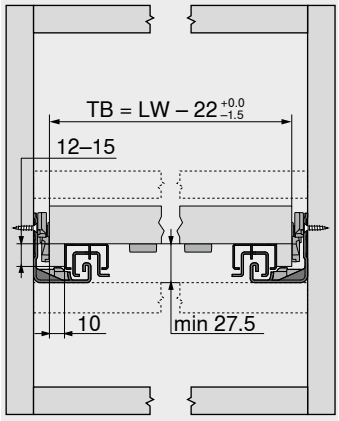

TB	Shelf width
LW	Internal cabinet width

Pull-out shelf

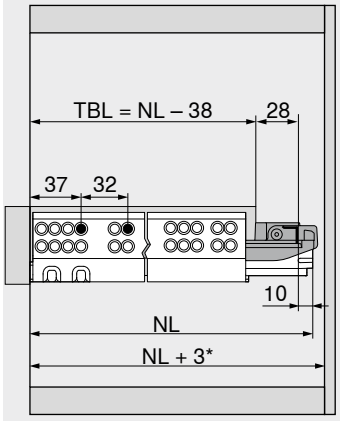

TBL	Pull-out shelf base length
NL	Nominal length
*	Additional +12 mm with side stabilisation

POS inset application

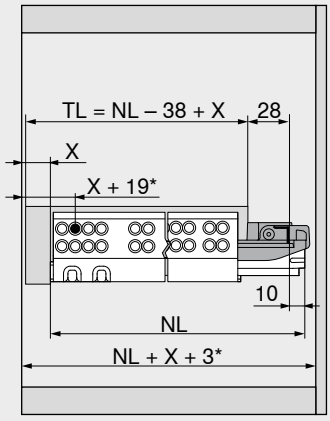

TL	Shelf length
NL	Nominal length
X	Pull-out shelf front piece thickness
*	Additional +2 mm with POSISTOP or additional +4 mm with TIP-ON

TANDEM – 561H

Space requirement in cabinet

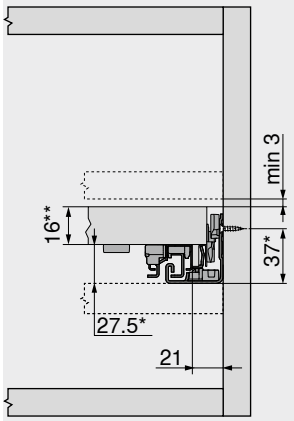

*	+3 mm with side stabiliser or +1 mm with TIP-ON
**	Min. 25 mm when installed in compartment

Pull-out shelf

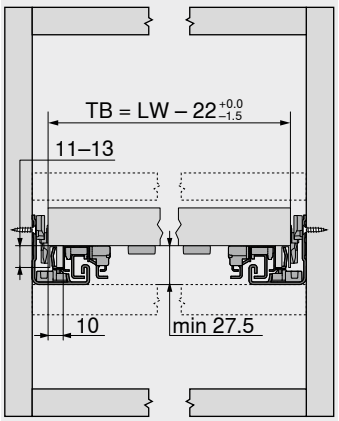

TB	Shelf width
LW	Internal cabinet width

Pull-out shelf

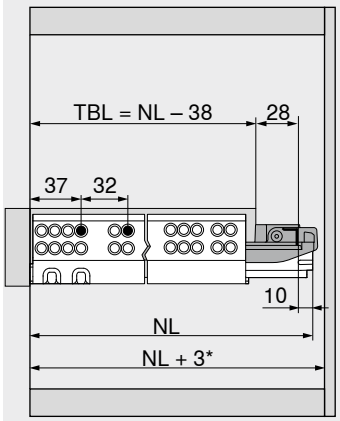

TBL	Pull-out shelf base length
NL	Nominal length
*	Additional +12 mm with side stabilisation

POS inset application

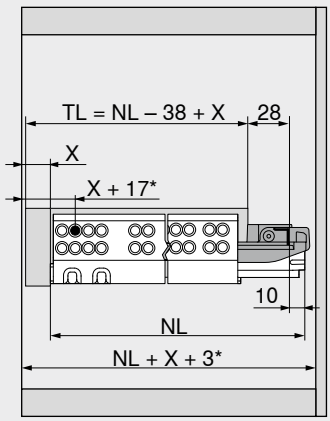

TL	Shelf length
NL	Nominal length
X	Pull-out shelf front piece thickness
*	Additional +4 mm with TIP-ON

Reference pages

Overview	447
Attachment of runners	490
E-SERVICES and assembly devices	590
More technical details	698

Pull-out shelf lock

Short URL
www.blum.com/i010

Assembly, removal and adjustment

Short URL
www.blum.com/a420