Cabinet with pull-out element – bracket profile horizontal

Planning

Drilling distances

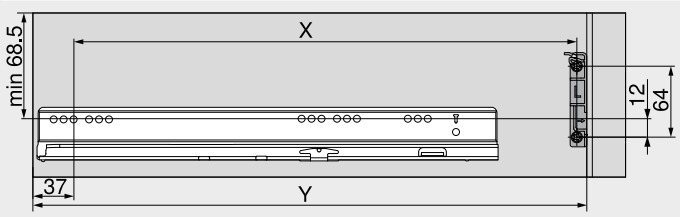

LEGRABOX

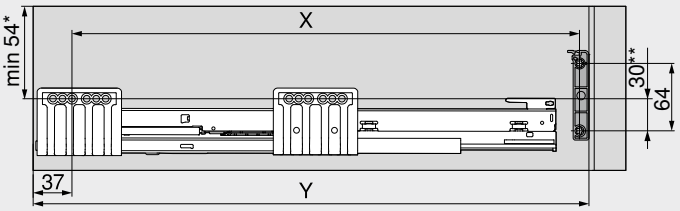

MERIVOBOX
* 32 mm for back height N
** 45 mm for back height N

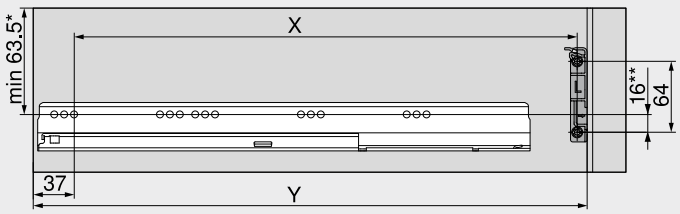

TANDEMBOX
* 55 mm for back height N
** 24 mm for back height N

Back	X (mm)	Y (mm)
Chipboard back	NL – 9	NL + 37
Steel back	NL – 26	NL + 20

NL Nominal length
X Drilling position
Y Min. space requirement

Space requirement and safety distance – power supply unit housing

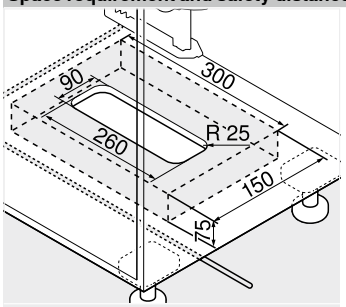

Base fixing

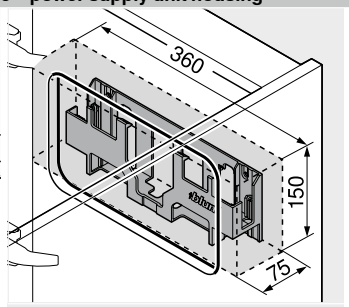

Panel fixing

Attention
Maintain a 30 mm safety distance from the bottom edge (base fixing) and/or front edge (panel fixing) and side edges of the power supply unit housing to the neighbouring elements!

Air must be able to circulate, otherwise the SERVO-DRIVE power supply unit could overheat!

Reference pages

Overview	359	Accessories	388	**Assembly, removal and adjustment**
LEGRABOX	190	E-SERVICES and assembly devices	590	
Overview	257	Machine directive	701	
TANDEMBOX antaro	302	More technical details	698	Short URL
TANDEMBOX plus	348			www.blum.com/a380
Order information	376			