COMPACT 107° hinge – 38B

Web code – click on the code or enter it in the Product Configurator: DQED2P

Planning

Hinge dimensions and gap calculation based on factory setting

Overlay application

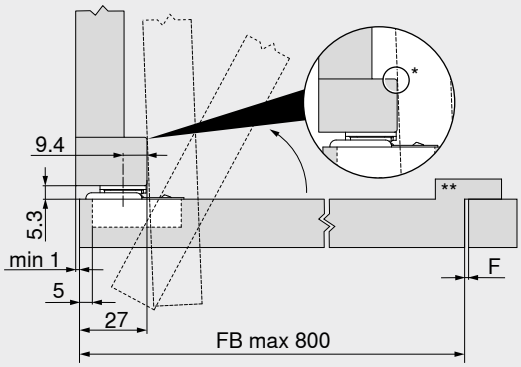

F	Gap Due to the size of the door, sufficient gaps are required on all 4 edges Reference value: min. 2 mm
*	Prevent collision
**	A door stop must be fitted to the side opposite the hinges when implementing an inward opening door – installed by furniture manufacturer. This ensures that the door cannot be misused and opened outwards.

Inward door projection FR

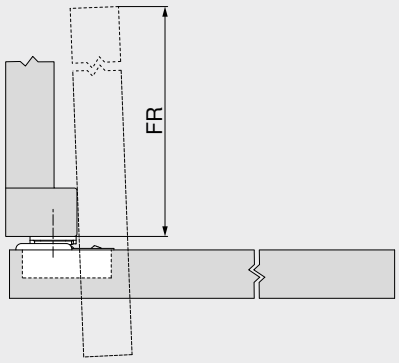

FR = FB – 48 mm

FB	Front width
FR	Inward door projection

Number of hinges

Front weight FG (kg)	Number of hinges
Up to 22	5
Up to 27	6
Up to 32	7

Application is tested with 80.000 opening and closing cycles

Adjustment

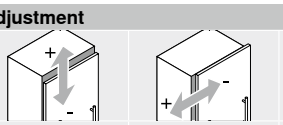

Max. ±2.0 mm ±1.6 mm

Screw-on

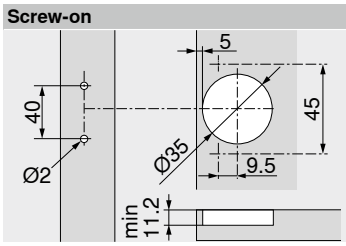

Hinge boss dimensions

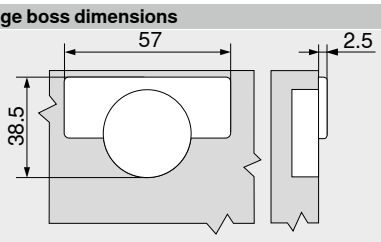

Reference pages

Overview	73
Inward opening furniture door	118
Accessories	159
Blum services	602
More technical details	708

Assembly, removal and adjustment

Short URL
www.blum.com/a210